CLERMONT COUNTY WATER RESOURCES DEPARTMENT
CLERMONT COUNTY, OHIO

VILLAGE OF NEWTONSVILLE
PART A - WASTEWATER TREATMENT PLANT (PROJECT No. 6402-60117) & PART B - COLLECTION SYSTEM ASSESSMENT (PROJECT No. 6402-60116)
2017

DRAWING INDEX

COUNT DRAWING NUMBER DRAWINGS TITLE

PART A

GENERAL

COUNT	DRAWING NUMBER	DRAWINGS TITLE
1	G-001	TITLE SHEET, INDEX OF DRAWINGS AND LOCATION PLAN
2	G-002	ABBREVIATIONS, GENERAL NOTES & LEGEND

CIVIL/SITE

COUNT	DRAWING NUMBER	DRAWINGS TITLE
3	C-001	ABBREVIATIONS, GENERAL NOTES & LEGEND
4	C-002	EXISTING SITE PLAN
5	C-003	MODIFIED SITE PLAN
6	C-004	ROADWAY PLAN 1
7	C-005	ROADWAY PLAN 2
8	C-006	PART "A" SANITARY SEWER PLAN AND PROFILE
9	C-007	OUTFALL SEWER PLAN AND PROFILE
10	C-008	LANDSCAPING PLAN
11	C-009	DETAILS 1
12	C-010	DETAILS 2
13	C-011	DETAILS 3

ARCHITECTURAL/STRUCTURAL

COUNT	DRAWING NUMBER	DRAWINGS TITLE
14	AS-001	LIFE SAFETY PLAN, BUILDING CODE DATA AND LEGENDS
15	AS-002	TERTIARY FILTRATION & DISINFECTION BUILDING ELEVATIONS
16	AS-003	TERTIARY FILTRATION & DISINFECTION BUILDING FOUNDATION PLAN
17	AS-004	TERTIARY FILTRATION & DISINFECTION BUILDING OPERATING PLANS
18	AS-005	TERTIARY FILTRATION & DISINFECTION BUILDING SECTIONS
19	AS-006	TERTIARY FILTRATION & DISINFECTION BUILDING SECTIONS AND SCHEDULES
20	AS-007	TYPICAL DETAILS 1
21	AS-008	TYPICAL DETAILS 2

STRUCTURAL

COUNT	DRAWING NUMBER	DRAWINGS TITLE
22	S-001	STRUCTURAL NOTES 1
23	S-002	STRUCTURAL NOTES 2
24	S-003	SPECIAL INSPECTIONS 1
25	S-004	SPECIAL INSPECTIONS 2
26	S-005	SCREEN/SEQUENCING BATCH REACTOR PLANS
27	S-006	SCREEN/SEQUENCING BATCH REACTOR SECTIONS AND DETAILS
28	S-007	MISCELLANEOUS STRUCTURES
29	S-008	TYPICAL DETAILS 1
30	S-009	TYPICAL DETAILS 2
31	S-010	TYPICAL DETAILS 3
32	S-011	TYPICAL DETAILS 4
33	S-012	TYPICAL DETAILS 5
34	S-013	TYPICAL DETAILS 6
35	S-014	TYPICAL DETAILS 7
36	S-015	TYPICAL DETAILS 8
37	S-016	TYPICAL DETAILS 9

PROCESS/MECHANICAL

COUNT	DRAWING NUMBER	DRAWINGS TITLE
38	D-001	PROCESS MECHANICAL LEGEND
39	D-002	DESIGN DATA, PLANT SCHEMATIC & HYDRAULIC PROFILE
40	D-003	RAW SEWAGE PUMP STATION PLANS AND SECTIONS
41	D-004	SCREEN/SEQUENCING BATCH REACTOR PLANS
42	D-005	SCREEN/SEQUENCING BATCH REACTOR SECTIONS AND DETAILS 1
43	D-006	SCREEN/SEQUENCING BATCH REACTOR SECTIONS AND DETAILS 2
44	D-007	AERATION BLOWER PLAN, SECTION & DETAILS
45	D-008	TERTIARY FILTRATION & DISINFECTION BUILDING PLAN
46	D-009	TERTIARY FILTRATION & DISINFECTION BUILDING SECTIONS
47	D-010	TERTIARY FILTRATION & DISINFECTION BUILDING DETAILS
48	D-011	POST AERATION PLAN, SECTIONS AND DETAILS
49	D-012	TYPICAL DETAILS 1
50	D-013	TYPICAL DETAILS 2
51	D-014	TYPICAL DETAILS 3
52	D-015	TYPICAL DETAILS 4

ELECTRICAL

COUNT	DRAWING NUMBER	DRAWINGS TITLE
53	E-001	ELECTRICAL SYMBOLS & LEGEND 1
54	E-002	ELECTRICAL SYMBOLS & LEGEND 2
55	E-003	ELECTRICAL SITE PLAN
56	E-004	ONE LINE DIAGRAM MCC ELEVATION & PANELBOARD SCHEDULE
57	E-005	RAW SEWAGE PUMP STATION, SCREEN/SEQUENCING BATCH REACTOR & BLOWER POWER PLANS
58	E-006	TERTIARY FILTER & DISINFECTION BUILDING POWER & LIGHTING PLANS
59	E-007	CONTROL DIAGRAMS RAW SEWAGE PUMPS & RELAY PANEL
60	E-008	CONTROL DIAGRAMS SEQUENCING BATCH REACTOR-PUMPS, MIXERS & TERTIARY FILTRATION
61	E-009	CONTROL DIAGRAMS PLC CONTROL PANEL
62	E-010	TYPICAL DETAILS 1
63	E-011	TYPICAL DETAILS 2

INSTRUMENTATION

COUNT	DRAWING NUMBER	DRAWINGS TITLE
64	IC-001	INSTRUMENTATION AND CONTROL LEGEND
65	IC-002	INSTRUMENTATION AND CONTROL AND FLOW STREAM IDENTIFICATION LEGEND
66	IC-003	RAW SEWAGE PUMP AND SCREENING P&ID
67	IC-004	SEQUENCING BATCH REACTOR P&ID
68	IC-005	TERTIARY FILTRATION, DISINFECTION, BLOWERS, AND CHEMICAL METERING PUMPS P&ID
69	IC-006	MISC. P&ID AND COMMUNICATIONS NETWORK ARCHITECTURE
70	IC-007	TYPICAL DETAILS 1
71	IC-008	TYPICAL DETAILS 2

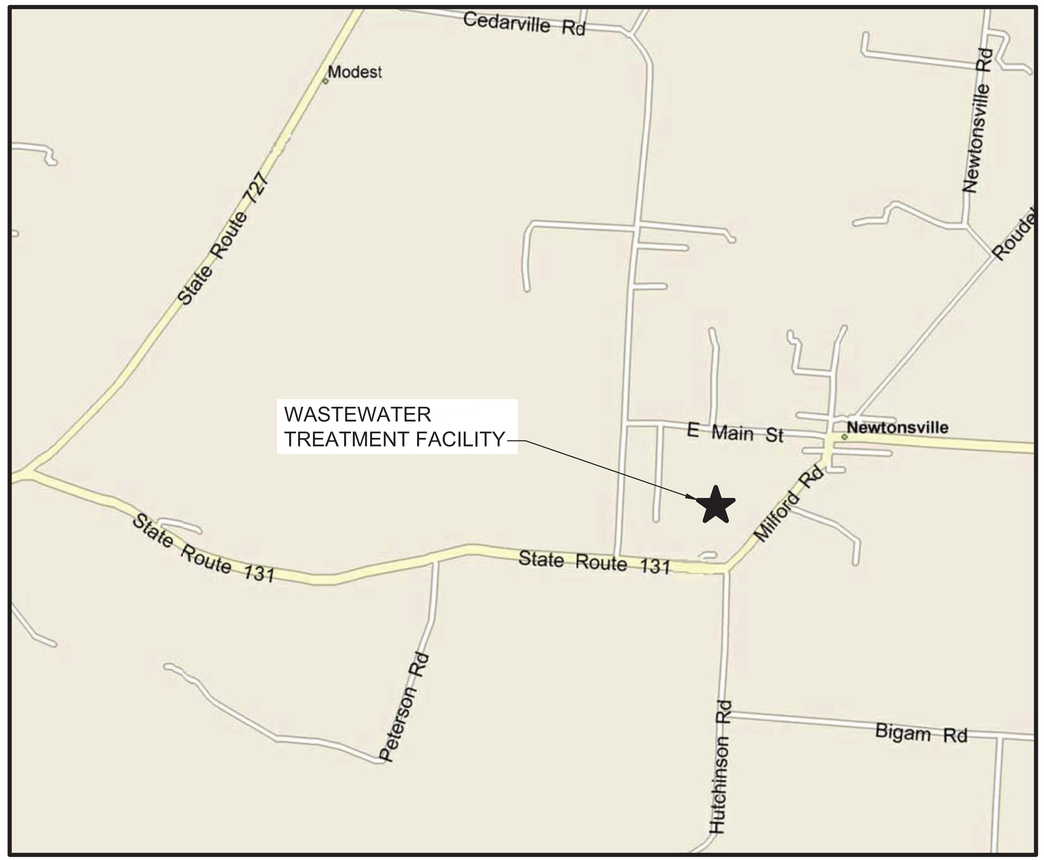

LOCATION MAP

N

DRAWING INDEX (CONTINUED)

COUNT DRAWING NUMBER DRAWINGS TITLE

PART B

CONVEYANCE

COUNT	DRAWING NUMBER	DRAWINGS TITLE
72	CS-001	KEY PLAN AND SURVEY CONTROL
73	CS-002	NOTES
74	CS-003	ACCESS DRIVE STA. 1+00 TO 11+00
75	CS-004	WRIGHT STREET STA. 11+00 TO 19+00
76	CS-005	WRIGHT ST., CROSS ST., & LIBERTY ST. STA. 19+00 TO 28+00
77	CS-006	WRIGHT STREET STA. 28+00 TO 39+07
78	CS-007	CROSS STREET STA. 160+00+168+04
79	CS-008	NEWTONSVILLE ROAD STA. 170+00 TO 179+00
80	CS-009	AMITY ST. STA. 130+00 TO 133+56
81	CS-010	MAIN STREET STA. 60+00 TO 69+00
82	CS-011	MAIN STREET STA. 69+00 TO 73+25
83	CS-012	WRIGHT STREET STA. 80+00 TO 89.00
84	CS-013	WRIGHT STREET STA. 89+00 TO 94+63
85	CS-014	PARK LAND AND PRIVATE LANDS STA. 99+90 TO 111+00
86	CS-015	WRIGHT ST. & CEDARVILLE RD. STA. 111+00 TO 120+00
87	CS-016	CEDARVILLE ROAD STA. 120+00 TO 129.32
88	CS-017	ACCESS DRIVE STA. 140+00 TO 150+00
89	CS-018	MAIN ST. STA. 50+00 TO 54+00 AND STA 151+00 TO 156+04
90	CS-019	DETAILS
91	CS-020	DETAILS

Clermont County

BOARD OF COMMISSIONERS

EDWIN H. HUMPHREY
DAVID H. UIBLE
DAVID L. PAINTER

COUNTY ADMINSTRATOR

STEPHEN RABOLT

CLERMONT COUNTY DIRECTOR OF UTILITIES

LYLE G. BLOOM, P.E.

CH2MHILL — JAMES R. GAGNON E-66893 — 3/31/17 — STATE OF OHIO — REGISTERED PROFESSIONAL ENGINEER

CH2MHILL — ALAN HWA CHIN LAI E-67729 — 3/31/17 — STATE OF OHIO — REGISTERED PROFESSIONAL ENGINEER

RA Consultants, LLC — DANIEL JOSEPH MARTIN 70395 — 3/31/17 — STATE OF OHIO — REGISTERED PROFESSIONAL ENGINEER

CH2MHILL — CHRISTOPHER B. ROBERTSON 69219 — 3/31/17 — STATE OF OHIO — REGISTERED PROFESSIONAL ENGINEER

CH2MHILL — ARNOL GILLUM E-65157 — 3-31-17 — STATE OF OHIO — REGISTERED PROFESSIONAL ENGINEER

CH2MHILL — BETH TRAUTWEIN 1215631 — 3/31/17 — STATE OF OHIO — REGISTERED ARCHITECT

BETH TRAUTWEIN
1215631 EXPIRES 12/32/2017

STATE OF OHIO — ALAN H. SMITH — 65440 — REGISTERED PROFESSIONAL ENGINEER

NO.	DATE	REVISION	BY	APVD

DSGN A SMITH | DR A SMITH | CHK J. BRADLEY | APVD J GAGNON | APVD A SMITH

©CH2M HILL 2015. ALL RIGHTS RESERVED.

VILLAGE OF NEWTONSVILLE
WASTEWATER TREATMENT PLANT & COLLECTION SYSTEM - PART A AND B
CLERMONT COUNTY WATER RESOURCES DEPARTMENT, CLERMONT COUNTY, OHIO

REUSE OF DOCUMENTS: THIS DOCUMENT, AND THE IDEAS AND DESIGNS INCORPORATED HEREIN, AS AN INSTRUMENT OF PROFESSIONAL SERVICE, IS THE PROPERTY OF CH2M HILL AND IS NOT TO BE USED, IN WHOLE OR IN PART, FOR ANY OTHER PROJECT WITHOUT THE WRITTEN AUTHORIZATION OF CH2M HILL.

GENERAL
TITLE SHEET, INDEX OF DRAWINGS AND LOCATION PLAN

NTS
VERIFY SCALE
BAR IS ONE INCH ON ORIGINAL DRAWING.
0 1"

DATE	2017-03-31
PROJ	652379
DWG	G-001
SHEET	1 of 91

BID READY

LEGEND

EXISTING	PROPOSED	ITEM
		PIPE < 24" DIA
		PIPE >= 24" DIA
W	W	WATER MAIN OR SERVICE
E	E	UNDER GROUND ELECTRIC
	10+00	PIPELINE WITH STATIONING
		VALVE
		FIRE HYDRANT
	1" CARV	COMBINATION AIR RELEASE VALVE WITH SIZE
MH	MH	MANHOLE
R/W	R/W	RIGHT-OF-WAY
PL	PL	PROPERTY LINE
		DRAINAGE WAY OR DITCH
	702	CONTROL POINT
370	370	CONTOUR
340	340	SPOT ELEVATION/FINISHED GRADE
		FENCE LINE
		BLIND FLANGE, CAP OR PLUG
M	M	METER
12" CMP	12" CMP	CULVERT WITH SIZE AND TYPE
		STORM CURB INLET
		STORM DITCH INLET
FM	FM	FORCE MAIN
G	G	GAS MAIN OR SERVICE
E-OVH	E-OHV	OVERHEAD POWER
T	T	UNDERGROUND TELEPHONE
OHT	OHT	OVERHEAD TELEPHONE
TV	TV	UNDERGROUND TELEVISION CABLE
FO	FO	UNDERGROUND FIBER OPTIC CABLE
		UTILITY POLE/POWER POLE
		POLE GUY WIRE
		LUMINAIRE
		SANITARY SEWER CLEANOUT
		SIGN
OR	OR	TREE (SIZE & SPECIES IF KNOWN)
		TREE TO BE REMOVED
		BRUSH/TREE LINE
		ASPHALT CONCRETE PAVEMENT
		GRAVEL SURFACING
		CONCRETE PAVEMENT
		CURB
		CURB AND GUTTER
N 1000.00 E 1000.00		STRUCTURE, BUILDING OR FACILITY LOCATION POINT - COORDINATES
B-1		BORING LOCATION AND NUMBER
TP-2		TEST PIT LOCATION AND NUMBER
		POTHOLE LOCATION

ABBREVIATIONS

@	AT
ABDN	ABANDON
AL	ALUMINUM
AVE	AVENUE
BOT	BOTTOM
CB	CATCH BASIN
CCT	CHLORINE CONTACT TANK
CIP	CAST IRON PIPE
CJ	CONSTRUCTION JOINT
CMP	CORRUGATED METAL PIPE
CONC	CONCRETE
CO	CLEAN OUT
DIA	DIAMETER
DIP	DUCTILE IRON PIPE
DR	DRIVE OR DIMENSION RATIO
E	EAST
EF	EACH FACE
EL	ELEVATION
ER	EFFLUENT RETURN
EX	EXISTING
EW	EACH WAY
FCA	FLANGED COUPLING ADAPTER
FM	FORCE MAIN
FO	FIBER OPTIC
G	GAS
GM	GRAVITY MAIN
HDPE	HIGH DENSITY POLYETHYLENE
HORIZ	HORIZONTAL
HN	HOUSE NUMBER
INV	INVERT
IP	IRON PIN
LT	LEFT
MAX	MAXIMUM
MIN	MINIMUM
MH	MANHOLE
MJ	MECHANICAL JOINT
N	NORTH
NCP	NONREINFORCED CONCRETE PIPE
NO	NUMBER
NTS	NOT TO SCALE
OA	OUTSIDE AIR
OC	ON CENTER
OD	OUTSIDE DIAMETER
OHP	OVERHEAD POWER
PE	PERMANENT EASEMENT
PEMB	PRE ENGINEERED METAL BUILDING
PAT	POST AERATION TANK
PL	PROPERTY LINE
PP	POWER POLE
PVC	POLYVINYLCHLORIDE
RCP	REINFORCED CONCRETE PIPE
RD	ROAD
REQD	REQUIRED
RFCA	RESTRAINED FLANGED COUPLING ADAPTER
RJ	RESTRAINED JOINT
RR	RAILROAD
RSS	RAW SEWAGE SIPHON
RT	RIGHT
R/W	RIGHT OF WAY
S	SOUTH
SD	STORM DRAIN
SDR	STANDARD DIMENSION RATIO
SI	SCREENED INFLUENT
SN	SEWER MANHOLE NUMBER
SPECD	SPECIFIED
SS	SANITARY SEWER
SST	STAINLESS STEEL
STA	STATION
T/	TOP OF
T,TEL	TELEPHONE
TD	TANK DRAIN
TE	TEMPORARY EASEMENT
TOC	TOP OF CONCRETE
TOF	TOP OF FRAMING
TOG	TOP OF GRATING
TV	TELEVISION
TYP	TYPICAL
UGE	UNDERGROUND ELECTRIC
UGT	UNDERGROUND TELEPHONE
VERT	VERTICAL
VSP	VITRIFIED SEWER PIPE
W	WATER, WEST
W/	WITH
WT	WEIGHT
YH	YARD HYDRANT

SECTION / DETAIL DESIGNATIONS

SECTION (LETTER) OR DETAIL (NUMERAL) DESIGNATION — A

DRAWING NUMBER (REPLACED WITH A LINE IF TAKEN AND SHOWN ON SAME SHEET)

1 / C-2 — ON DRAWING WHERE SECTION OR DETAIL IS TAKEN: DRAWING NUMBER WHERE SHOWN

B — SECTION — SCALE — S-4 — ON DRAWING WHERE SECTION IS SHOWN: DRAWING NUMBER(S) WHERE TAKEN

2 — DETAIL — SCALE — E-11 — ON DRAWING WHERE DETAIL IS SHOWN: DRAWING NUMBER(S) WHERE TAKEN

DRAWING TITLE — SCALE — ON DRAWING WHERE ONLY A TITLE IS REQUIRED WITH NO REFERENCE (eg: ELEVATIONS)

B — SECTION CALLOUT WHERE SECTION IS ON THE SAME SHEET AND CUT EXTENDS TO A FIXED LIMIT

B / D-4 — B / D-4 — SECTION CALLOUT WHERE SECTION IS ON ANOTHER SHEET AND CUT EXTENDS THROUGHOUT ENTIRE SHEET

1 — KEYNOTE NUMBER

1 — REVISION / ADDENDA NUMBER

N — NORTH ARROW; CAN BE MODIFIED TO INCLUDE MAGNETIC NORTH ALONG WITH PROJECT NORTH

DESIGN DETAIL DESIGNATION

DESIGN DETAIL DESIGNATION (NUMERAL) — 1234-567

SHOWN ON DESIGN DETAIL DRAWING(S)

NOTES:

1. ALL DESIGN DETAILS ARE TYPICAL AND MUST BE USED IF DESIGN DETAIL DESIGNATION IS NOT SHOWN
2. THE TERM STANDARD DETAIL, OR A FORM OF IT, IS SYNONYMOUS WITH DESIGN DETAIL AND REFERS TO THE DESIGN DETAILS FOUND IN THIS SET OF CONTRACT DOCUMENTS.
3. THE DESIGN DETAILS REPRESENT THE CHARACTER AND NATURE OF THE WORK REQUIRED THROUGHOUT THE PROJECT. ALL ASSOCIATED WORK SHALL BE IN ACCORDANCE WITH THE DESIGN DETAILS SHOWN WHETHER THE DETAILS ARE SPECIFICALLY REFERENCED OR NOT.

GENERAL CONSTRUCTION NOTES

1. EXISTING UTILITY INFORMATION SHOWN IS APPROXIMATE. IT IS THE RESPONSIBILITY OF THE CONTRACTOR TO FIELD VERIFY ALL INFORMATION SHOWN BEFORE COMMENCEMENT OF CONSTRUCTION.
2. PRESERVE ALL SURVEY MARKERS AND MONUMENTATION WHEREVER POSSIBLE. RE-ESTABLISH THOSE REQUIRING REMOVAL IN ACCORDANCE WITH THE LOCAL GOVERNING AUTHORITY.
3. EXISTING CONDITIONS MAY VARY FROM THOSE SHOWN ON THESE PLANS. THE CONTRACTOR SHALL VERIFY EXISTING CONDITIONS AND ADJUST WORK AND PLAN ACCORDINGLY PRIOR TO BEGINNING CONSTRUCTION.
4. EXISTING TOPOGRAPHY, STRUCTURES, AND SITE FEATURES ARE SHOWN SCREENED AND/OR LIGHT-LINED. NEW FINISH GRADE, STRUCTURES, AND SITE FEATURES ARE SHOWN HEAVY-LINED.
5. STAGING AREA SHALL BE FOR CONTRACTOR'S EMPLOYEE PARKING, CONTRACTOR'S TRAILERS AND ON-SITE STORAGE OF MATERIALS.
6. PROVIDE TEMPORARY FENCING AS NECESSARY TO MAINTAIN SECURITY AT ALL TIMES.
7. ELEVATIONS GIVEN ARE TO FINISH GRADE UNLESS OTHERWISE SHOWN.
8. SLOPE UNIFORMLY BETWEEN CONTOURS AND SPOT ELEVATIONS SHOWN.
9. UNLESS SHOWN ON THE PLANS, ALL DISTURBED AREAS NOT RECEIVING A HARD SURFACE SHALL BE COVERED WITH GRASS.
10. CONTRACTOR SHALL BE RESPONSIBLE FOR IMPLEMENTING AND MAINTAINING EROSION CONTROL DEVICES DURING CONSTRUCTION. EROSION CONTROL DEVICES CONSISTING OF FILTER FENCING AND STAKED STRAW BALE BARRIERS ARE THE MINIMUM REQUIRED.
11. CONTRACTOR SHALL TAKE ALL OTHER MEASURES TO POSITIVELY PRECLUDE EROSION MATERIALS FROM LEAVING THE SITE. CONTRACTOR TO SUBMIT EROSION CONTROL PLAN PRIOR TO BEGINNING WORK..
12. THE CONTRACTOR SHALL INVESTIGATE THE SITE PRIOR TO BIDDING. THE CONTRACTOR SHALL EXAMINE IN THE FIELD THE AVAILABLE WORK AREA, NEARBY STRUCTURES, FIELD CONDITIONS, AND ACCESS TO THE WORK AREA.
13. THE CONTRACTOR SHALL BE RESPONSIBLE FOR LOCATING ALL EXISTING STRUCTURES, UTILITIES, PIPING, AND VERIFYING THEIR EXACT LOCATION WITHIN THE LIMITS OF WORK PRIOR TO THE INCEPTION OF CONSTRUCTION.
14. THE DRAWINGS MAY NOT SHOW ALL EXISTING FACILITIES. THE CONTRACTOR SHALL INVESTIGATE, LOCATE AND MARK ALL ELECTRICAL CONDUITS BEFORE THE START OF ANY DEMOLITION OR CONSTRUCTION WORK.
15. THE CONTRACTOR SHALL VERIFY BY FIELD MEASUREMENT THE REQUIRED LOCATIONS OF ALL PIPES, FITTINGS, EQUIPMENT, AND STRUCTURES TO ASSURE PROPER CLEARANCE AND SPACING PRIOR TO FABRICATION OR INSTALLATION.
16. THE CONTRACTOR SHALL TAKE ALL NECESSARY PRECAUTIONS TO MAINTAIN UNINTERRUPTED SANITARY FLOWS . ANY DAMAGE RESULTING FROM ACTIONS OR LACK OF ACTIONS BY THE CONTRACTOR SHALL BE REPAIRED IMMEDIATELY TO THE SATISFACTION OF THE OWNER AT NO ADDITIONAL COST TO THE OWNER.
17. ALL WORK REQUIRED TO RELOCATE UTILITIES (ELECTRIC, PHONE, GAS AND WATER) DUE TO CONFLICTS IN LINE OR GRADE WILL BE DONE BY AND AT THE EXPENSE OF THE CONTRACTOR, UNLESS OTHERWISE PROVIDED FOR.
18. THE CONTRACTOR SHALL PROVIDE ALL NECESSARY PERMANENT AND TEMPORARY PIPING, FITTINGS, BULKHEADS, SHORINGS, PUMPING, LABOR AND EQUIPMENT REQUIRED TO CONNECT OR TIE-IN WITH EXISTING SERVICES. EXISTING UTILITIES SHALL BE KEPT IN SERVICE.
19. THE CONTRACTOR SHALL FURNISH ALL LABOR, MATERIALS, EQUIPMENT, INCIDENTALS AND APPURTENANCES NEEDED TO COMPLETE EVERY DETAIL AND LEAVE IN SATISFACTORY WORKING ORDER ALL ITEMS CALLED FOR AND/OR SHOWN ON THE DRAWINGS. ANY MATERIALS OR WORK NOT SPECIFICALLY STATED OR SHOWN ON DRAWINGS THAT ARE REQUIRED TO COMPLETE THE WORK AS SHOWN SHALL BE FURNISHED BY THE CONTRACTOR AT HIS OWN COST.
20. THE CONTRACTOR IS ADVISED THAT ALL EQUIPMENT, INCLUDING LAYING LENGTH, DIMENSIONS, ELEVATIONS AND ORIENTATION IS DEPENDENT UPON EQUIPMENT MANUFACTURER'S RECOMMENDATIONS AND THE APPROVED SHOP DRAWINGS.
21. ALL EQUIPMENT SHALL BE INSTALLED AND ANCHORED PER THE MANUFACTURER'S RECOMMENDATIONS AND APPROVED SHOP DRAWINGS.
22. A GEOTECHNICAL EXPLORATION REPORT PREPARED BY THELEN ASSOCIATES DATED MARCH 10, 2016 FOR THE PROJECT IS INCLUDED IN SECTION C, SUPPLEMENTAL GENERAL CONDITIONS OF THE CONSTRUCTION CONTRACT.
23. UNLESS OTHERWISE SHOWN OR SPECIFIED, ALL WORK AND MATERIALS SHALL CONFORM TO THE LATEST RULES AND REGULATIONS OF THE CLERMONT COUNTY WATER RESOURCES DEPARTMENT FOUND AT WRD.CLERMONTCOUNTYOHIO.GOV.

CONSTRUCTION SEQUENCING NOTES (APPLIES TO PART A AND PART B):

1. THE PART A WWTP AND THE PART B COLLECTION SYSTEM CONVEYANCE MAINS SHALL BE CONSTRUCTED CONCURRENTLY.
2. CONTRACTOR FOR PART A SHALL CONSTRUCT ACCESS DRIVE (REFER TO SHEET C-004) AND SEWER (REFER TO SHEET C-006) AND ALL UTILITIES LOCATED WITHIN THE EASEMENT AS A FIRST TASK IN CONSTRUCTION SCHEDULE TO ENABLE THE PART B CONTRACTOR TO BEGIN SEWER INSTALLATION AT THE EARLIEST POSSIBLE DATE.
3. THE PART B CONTRACTOR SHALL BE RESPONSIBLE FOR THE INSTALLING THE GRAVITY OR LOW PRESSURE FORCE LATERALS FROM THE CONVEYANCE MAIN TO THE RIGHT-OF-WAY, EDGE OF EASEMENT, OR THE 'STEP'/'STEG' SYSTEMS AT EACH PROPERTY AND FOR THE INSTALLATION OF THE 'STEP'/'STEG' SYSTEMS, WHERE SHOWN OR INDICATED ON THE PROJECT DRAWINGS.
4. THE CONNECTION BETWEEN THE HOUSE/STRUCTURE AND SEWER LATERAL LOCATED AT THE RIGHT-OF-WAY, EDGE OF EASEMENT, OR THE 'STEP'/'STEG' SYSTEM IS NOT PART OF EITHER PART A OR PART B.
5. PROPERTY OWNERS WILL NOT BE PERMITTED TO CONNECT TO THE SEWER LATERAL UNTIL BOTH PARTS A & B REACH SUBSTANTIAL COMPLETION AS DETERMINED BY THE CCWRD, AND THE APPROPRIATE APPLICATION AND FEES ARE PAID. THE CLERMONT COUNTY BOARD OF HEALTH WILL OVERSEE PROPERTY OWNER CONNECTION TO THE SEWER.

STATE OF OHIO — ALAN H. SMITH — 74340 — REGISTERED PROFESSIONAL ENGINEER

NO.	DATE	REVISION	BY	APVD
DSGN	A SMITH	DR J BRADLEY	CHK J GAGNON	APVD A SMITH

©CH2M HILL 2015. ALL RIGHTS RESERVED.

REUSE OF DOCUMENTS: THIS DOCUMENT, AND THE IDEAS AND DESIGNS INCORPORATED HEREIN, AS AN INSTRUMENT OF PROFESSIONAL SERVICE, IS THE PROPERTY OF CH2M HILL AND IS NOT TO BE USED, IN WHOLE OR IN PART, FOR ANY OTHER PROJECT WITHOUT THE WRITTEN AUTHORIZATION OF CH2M HILL.

Clermont County

VILLAGE OF NEWTONSVILLE
WASTEWATER TREATMENT PLANT & COLLECTION SYSTEM - PART A AND B
CLERMONT COUNTY WATER RESOURCES DEPARTMENT, CLERMONT COUNTY, OHIO

ch2m

GENERAL

ABBREVIATIONS, GENERAL NOTES & LEGEND

NTS

VERIFY SCALE

BAR IS ONE INCH ON ORIGINAL DRAWING. 0 — 1"

DATE	2017-03-31
PROJ	652379
DWG	G-002
SHEET	2 of 91

BID READY

GENERAL SITE NOTES:

1. HORIZONTAL DATUM: NAD83 (2011) OHIO STATE PLANE SOUTH.
2. VERTICAL DATUM: NAVD88.
3. MAINTAIN, RELOCATE, OR REPLACE EXISTING SURVEY MONUMENTS, CONTROL POINTS, AND STAKES WHICH ARE DISTURBED OR DESTROYED. PERFORM THE WORK TO PRODUCE THE SAME LEVEL OF ACCURACY AS THE ORIGINAL MONUMENT(S) IN A TIMELY MANNER, AND AT THE CONTRACTOR'S EXPENSE.
4. COORDINATES AND DIMENSIONS SHOWN FOR ROADWAY IMPROVEMENTS ARE TO FACE OF CURB OR EDGE OF PAVEMENT.
5. EROSION CONTROL PLAN: SUBMIT FOR REVIEW AN EROSION CONTROL PLAN IN ADVANCE OF THE WORK. THE PLAN SHALL INCLUDE SITE PLANS OF THE WORK AREA, BARRIER DETAILS AND ERECTION AND REMOVAL SCHEDULES.
6. THE CONTRACTOR SHALL DEVELOP A STORM WATER POLLUTION PREVENTION PLAN (SWP3) FOR THE CONSTRUCTION SITE.
7. THE CONTRACTOR SHALL SUBMIT A CO-PERMITTEE NOTICE OF INTENT (NOI:) TO DISCHARGE STORM WATER.
8. AS PART OF THE SITE CLEARING PROCESS, REMOVAL OF ANY TREES GREATER THAN 3 INCHES DIAMETER AT BREAST HEIGHT SHALL ONLY OCCUR BETWEEN OCTOBER 1 AND MARCH 31.

GENERAL YARD PIPING AND UTILITIES NOTES:

1. IT IS THE CONTRACTOR'S RESPONSIBILITY TO VERIFY THE EXACT LOCATION OF EXISTING UTILITIES AND TO AVOID DAMAGE TO THEM.
2. FOR PIPING FLOW STREAM IDENTIFICATION, SEE BURIED PIPING SCHEDULE.
3. EXISTING PIPING AND EQUIPMENT ARE SHOWN SCREENED AND/OR LIGHT-LINED.NEW PIPING AND EQUIPMENT ARE SHOWN HEAVY-LINED.
4. UNLESS OTHERWISE SHOWN ALL PIPING SHALL HAVE A MINIMUM OF 3'-0" COVER.
5. ALL PIPES SHALL HAVE A CONSTANT SLOPE BETWEEN INVERT ELEVATIONS UNLESS A FITTING IS SHOWN.
6. ALL NEW WATER PIPES MUST BE PROPERLY FLUSHED, PRESSURE TESTED, CHLORINATED AND BACTERIOLOGICALLY TESTED, AS SPECIFIED.
7. FOR TRENCHING AND BACKFILL, SEE 3123-110 .
8. FOR ASPHALT CONCRETE, SEE 3212-210 , FOR CONCRETE PAVEMENT, SEE 3213-240 ,FOR GRAVEL SURFACING, SEE 3215-260 , AND FOR GRASS, SEE SPECIFICATION 32 92 00.
9. MINIMUM ALLOWABLE CLEARANCE BETWEEN PIPES AT CROSSINGS SHALL BE 3". CONTROLLED DENSITY FILL SUPPORT IS REQUIRED AS SHOWN ON 3123-120 .
10. CONTRACTOR SHALL UTILIZE AND COMPLY WITH CLERMONT COUNTY WATER RESOURCES STANDARD SPECIFICATIONS AND STANDARD DETAILS FOR THE CIVIL WORK SHOWN ON C-006. REFER TO SECTION C, SUPPLEMENTAL GENERAL CONDITIONS OF THE CONSTRUCTION CONTRACT.

CIVIL LEGEND

EXISTING	THIS CONTRACT	
× 157.7	⊗ 158.5	SPOT ELEVATION
155	155	CONTOUR LINE
	3:1	EMBANKMENT AND SLOPE
		DRAINAGEWAY OR DITCH
	CB OR CB	CATCH BASIN OR INLET
		TRENCH DRAIN
	OR	SIGN
	D OR S	MANHOLE
E	E	ELECTRICAL MANHOLE
H	H	ELECTRIC HANDHOLE
		POST OR GUARD POST
		GUY ANCHOR
		FIRE HYDRANT
		UTILITY POLE
		LIGHT POLE
	BM	BENCH MARK
		SURVEY CONTROL POINT OR POINT OF INTERSECTION
		BRUSH/TREE LINE
		TREE
		PROPERTY LINE
		CENTER LINE, BUILDING, ROAD, ETC.
		STAGING OR WORK AREA LIMITS
	N 1000.00 E 1000.00	STRUCTURE, BUILDING OR FACILITY LOCATION POINT - COORDINATES
	B-1	BORING LOCATION AND NUMBER
	TP-2	TEST PIT LOCATION AND NUMBER
	P-3	PIEZOMETER LOCATION AND NUMBER
OR	OR	DEMOLITION
OR	OR	STRUCTURE, BUILDING OR FACILITY
		ASPHALT CONCRETE PAVEMENT
		GRAVEL SURFACING
		CONCRETE PAVEMENT
		CURB
		CURB AND GUTTER
		SINGLE SWING GATE
		DOUBLE SWING GATE
		SLIDING GATE
		GUARD RAIL
		CHAIN LINK FENCE
		ARCHITECTURAL FENCE
		WIRE FENCE
		CULVERT

YARD PIPING LEGEND

EXISTING	THIS CONTRACT	
		NOMINAL PIPE DIAMETER
		PIPE USE IDENTIFICATION
8" PE	8" PE	PIPING < 30" DIAMETER
		PIPING ≧ 30" DIAMETER
		EXISTING PIPE TO BE ABANDONED
		EXISTING PIPE TO BE REMOVED
		NON-FREEZE YARD HYDRANT (V-X) X = NO. IN SPECIFICATIONS
		NON-FREEZE HOSE VALVE WITH HOSE RACK (V-X) X = NO. IN SPECIFICATIONS
		INDICATOR POST VALVE
		GATE VALVE AND VALVE BOX
		BUTTERFLY VALVE AND VALVE BOX
		PLUG VALVE AND VALVE BOX
		FLEXIBLE COUPLING
		90° ELBOW UP
		90° ELBOW DOWN
		BEND < 90° UP
		BEND < 90° DOWN
		CONCENTRIC REDUCER
		CAP OR PLUG
		CLEANOUT
		FIRE HYDRANT

EROSION CONTROL LEGEND

COVER PRACTICES	SYMBOL
TEMPORARY SEEDING	TS
MULCHING AND MATTING	MU
CLEAR PLASTIC COVERING	CPC
BUFFER ZONES	BZ
PERMANENT SEEDING AND PLANTING	PS
CONSTRUCTION ENTRANCE	
INTERCEPTOR DIKE	ID
INTERCEPTOR SWALE	IS
CHECK DAMS	
OUTLET PROTECTION / RIPRAP	
FILTER FENCE	
STRAW BALE BARRIER (BIOFILTER)	
SEDIMENT TRAP (OR SUMP)	
SEDIMENT POND OR BASIN	

GENERAL NOTE:

1. THIS IS A STANDARD LEGEND SHEET. THEREFORE, NOT ALL OF THE INFORMATION SHOWN MAY BE USED ON THIS PROJECT.

STATE OF OHIO ALAN H. SMITH 54340 REGISTERED PROFESSIONAL ENGINEER

NO.	DATE	REVISION	BY	APVD

DSGN A SMITH | DR A SMITH | CHK D CORBETT | APVD J GAGNON | APVD A SMITH

REUSE OF DOCUMENTS: THIS DOCUMENT, AND THE IDEAS AND DESIGNS INCORPORATED HEREIN, AS AN INSTRUMENT OF PROFESSIONAL SERVICE, IS THE PROPERTY OF CH2M HILL AND IS NOT TO BE USED, IN WHOLE OR IN PART, FOR ANY OTHER PROJECT WITHOUT THE WRITTEN AUTHORIZATION OF CH2M HILL.
©CH2M HILL 2015. ALL RIGHTS RESERVED.

Clermont County

VILLAGE OF NEWTONSVILLE
WASTEWATER TREATMENT PLANT & COLLECTION SYSTEM - PART A
CLERMONT COUNTY WATER RESOURCES DEPARTMENT, CLERMONT COUNTY, OHIO

ch2m

CIVIL
ABBREVIATIONS, GENERAL NOTES & LEGEND

NTS
VERIFY SCALE
BAR IS ONE INCH ON ORIGINAL DRAWING.
0 1"

DATE	2017-03-31
PROJ	486707
DWG	C-001
SHEET	3 of 91

BID READY

GENERAL NOTES

1. REFER TO CONTRACT DOCUMENTS FOR SOIL BORING LOG INFORMATION.
2. CONTRACTOR'S LAYDOWN AREA SHALL BE LOCATED AS SHOWN OR DETERMINED BY THE COUNTY.
3. RESTORE ALL LAYDOWN AND STORAGE AREAS TO PRECONSTRUCTION CONDITIONS.
4. ALL LOCATIONS OF EXISTING STRUCTURES, PIPING, AND UTILITIES ARE APPROXIMATE. FIELD VERIFY LOCATIONS, SIZES, MATERIALS, AND CONDITIONS OF EXISTING STRUCTURES, BURIED PIPING, AND UTILITIES PRIOR TO BEGINNING WORK.
5. BORING LOCATIONS ARE APPROXIMATE. CONTRACTOR SHALL FIELD VERIFY.
6. VEGETATIVE COVER, SHRUBS, TREES, AND EXTENT OF TREE LINE SHOWN ARE APPROXIMATE.
7. ACCESS TO VILLAGE OF NEWTONSVILLE PARKING, BUILDINGS, AND SHELTERS SHALL NOT BE IMPEDED.

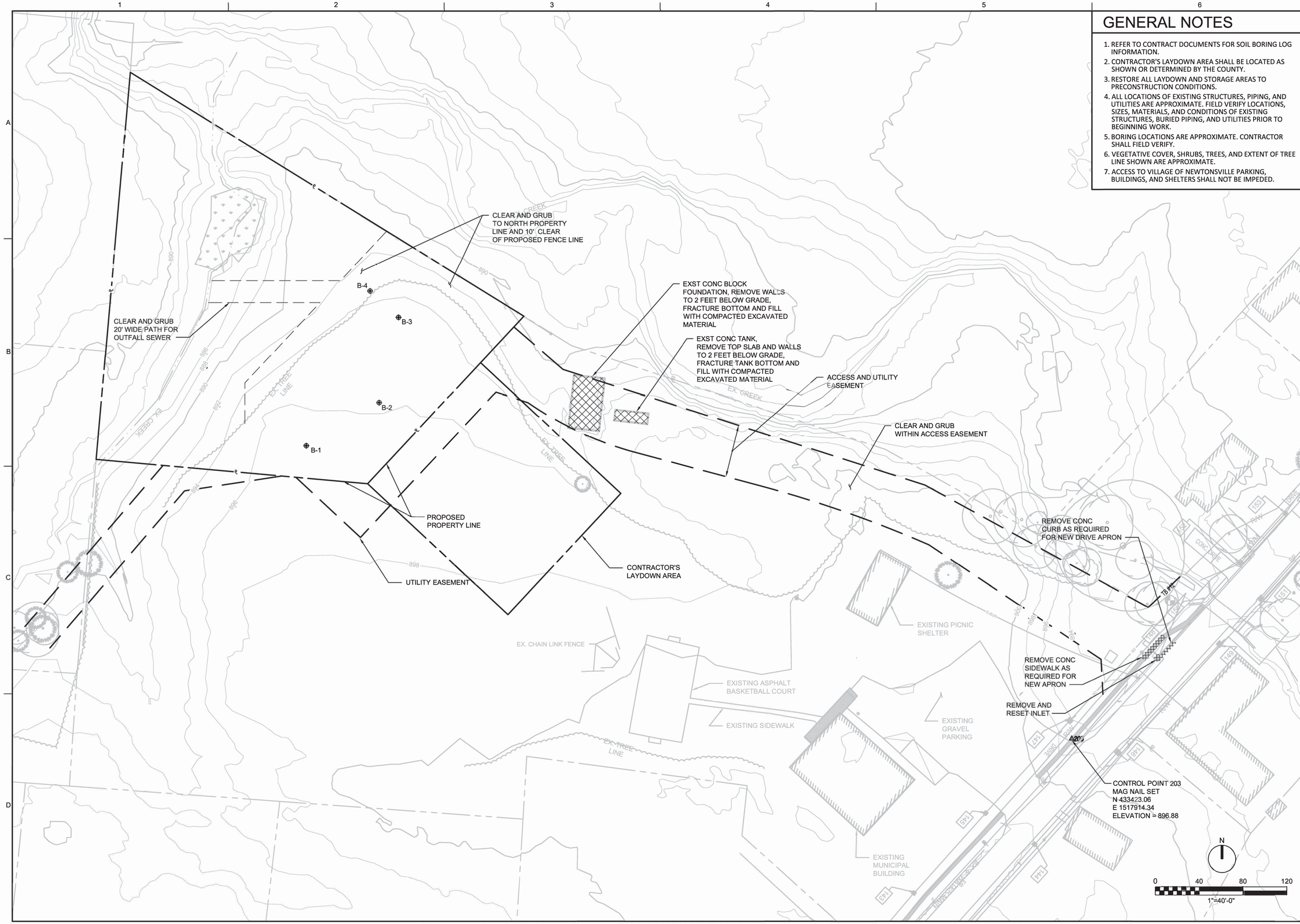

STATE OF OHIO
ALAN H. SMITH
REGISTERED
PROFESSIONAL ENGINEER

NO.	DATE	DR	CHK	REVISION	BY	APVD
DSGN	A SMITH	D CORBETT	J GAGNON		A SMITH	

©CH2M HILL 2015. ALL RIGHTS RESERVED.

Clermont County

VILLAGE OF NEWTONSVILLE
WASTEWATER TREATMENT PLANT & COLLECTION SYSTEM - PART A
CLERMONT COUNTY WATER RESOURCES DEPARTMENT, CLERMONT COUNTY, OHIO

ch2m

CIVIL

EXISTING SITE PLAN

REUSE OF DOCUMENTS: THIS DOCUMENT, AND THE IDEAS AND DESIGNS INCORPORATED HEREIN, AS AN INSTRUMENT OF PROFESSIONAL SERVICE, IS THE PROPERTY OF CH2M HILL AND IS NOT TO BE USED, IN WHOLE OR IN PART, FOR ANY OTHER PROJECT WITHOUT THE WRITTEN AUTHORIZATION OF CH2M HILL.

1"=40'

VERIFY SCALE

BAR IS ONE INCH ON ORIGINAL DRAWING.
0 1"

DATE	2017-03-31
PROJ	665163
DWG	C-002
SHEET	4 of 91

BID READY

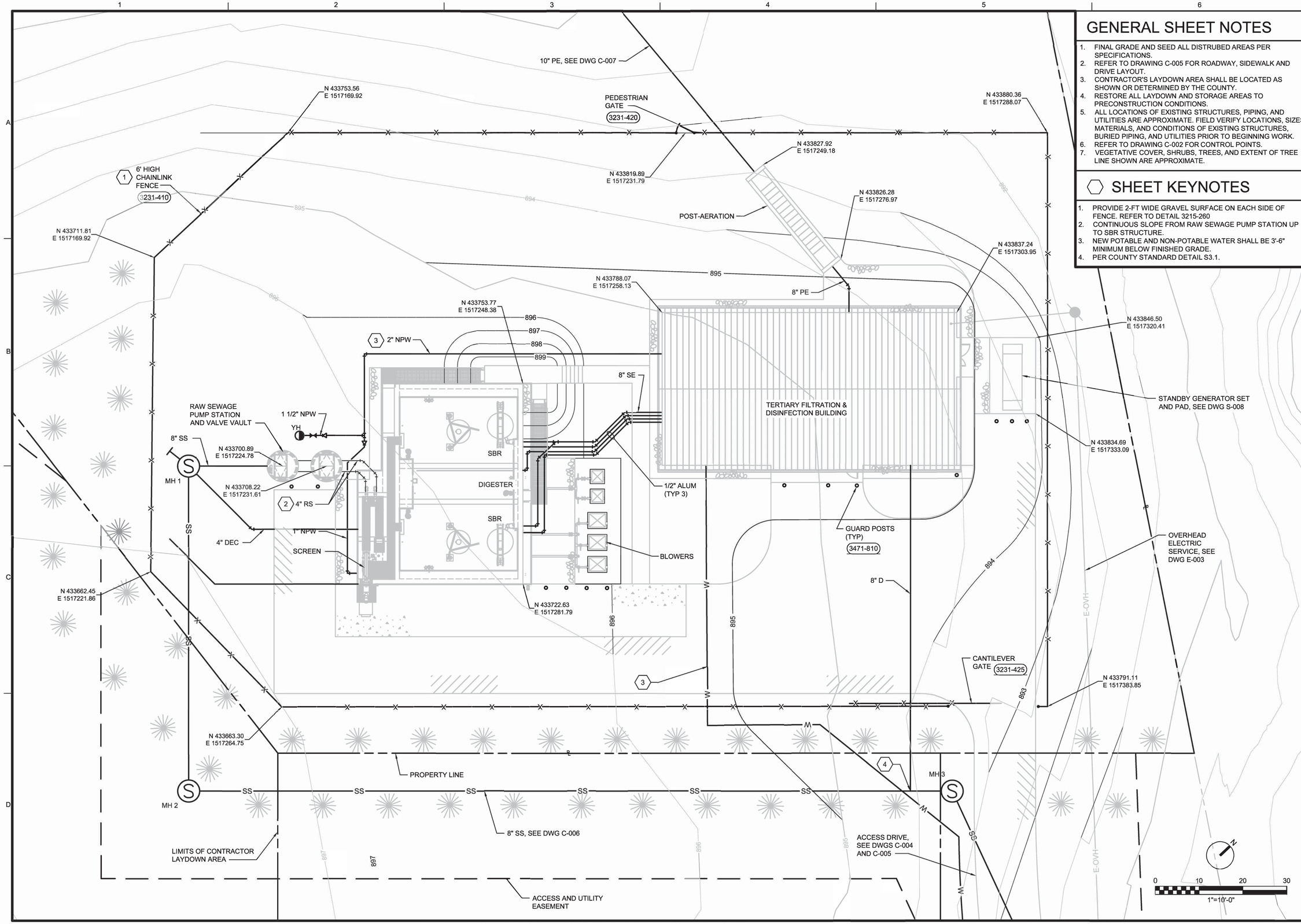

GENERAL SHEET NOTES

1. FINAL GRADE AND SEED ALL DISTRUBED AREAS PER SPECIFICATIONS.
2. REFER TO DRAWING C-005 FOR ROADWAY, SIDEWALK AND DRIVE LAYOUT.
3. CONTRACTOR'S LAYDOWN AREA SHALL BE LOCATED AS SHOWN OR DETERMINED BY THE COUNTY.
4. RESTORE ALL LAYDOWN AND STORAGE AREAS TO PRECONSTRUCTION CONDITIONS.
5. ALL LOCATIONS OF EXISTING STRUCTURES, PIPING, AND UTILITIES ARE APPROXIMATE. FIELD VERIFY LOCATIONS, SIZES, MATERIALS, AND CONDITIONS OF EXISTING STRUCTURES, BURIED PIPING, AND UTILITIES PRIOR TO BEGINNING WORK.
6. REFER TO DRAWING C-002 FOR CONTROL POINTS.
7. VEGETATIVE COVER, SHRUBS, TREES, AND EXTENT OF TREE LINE SHOWN ARE APPROXIMATE.

SHEET KEYNOTES

1. PROVIDE 2-FT WIDE GRAVEL SURFACE ON EACH SIDE OF FENCE. REFER TO DETAIL 3215-260
2. CONTINUOUS SLOPE FROM RAW SEWAGE PUMP STATION UP TO SBR STRUCTURE.
3. NEW POTABLE AND NON-POTABLE WATER SHALL BE 3'-6" MINIMUM BELOW FINISHED GRADE.
4. PER COUNTY STANDARD DETAIL S3.1.

STATE OF OHIO
ALAN H. SMITH
REGISTERED
PROFESSIONAL ENGINEER

NO.	DATE	REVISION	BY	APVD
DSGN	A SMITH	DR D CORBETT	CHK J GAGNON	APVD A SMITH

©CH2M HILL 2015. ALL RIGHTS RESERVED.

REUSE OF DOCUMENTS: THIS DOCUMENT, AND THE IDEAS AND DESIGNS INCORPORATED HEREIN, AS AN INSTRUMENT OF PROFESSIONAL SERVICE, IS THE PROPERTY OF CH2M HILL AND IS NOT TO BE USED, IN WHOLE OR IN PART, FOR ANY OTHER PROJECT WITHOUT THE WRITTEN AUTHORIZATION OF CH2M HILL.

Clermont County

VILLAGE OF NEWTONSVILLE
WASTEWATER TREATMENT PLANT & COLLECTION SYSTEM - PART A
CLERMONT COUNTY WATER RESOURCES DEPARTMENT, CLERMONT COUNTY, OHIO

ch2m

CIVIL

MODIFIED SITE PLAN

1"=10'

VERIFY SCALE

BAR IS ONE INCH ON ORIGINAL DRAWING.
0 1"

DATE	2017-03-31
PROJ	665163
DWG	C-003
SHEET	5 of 91

BID READY

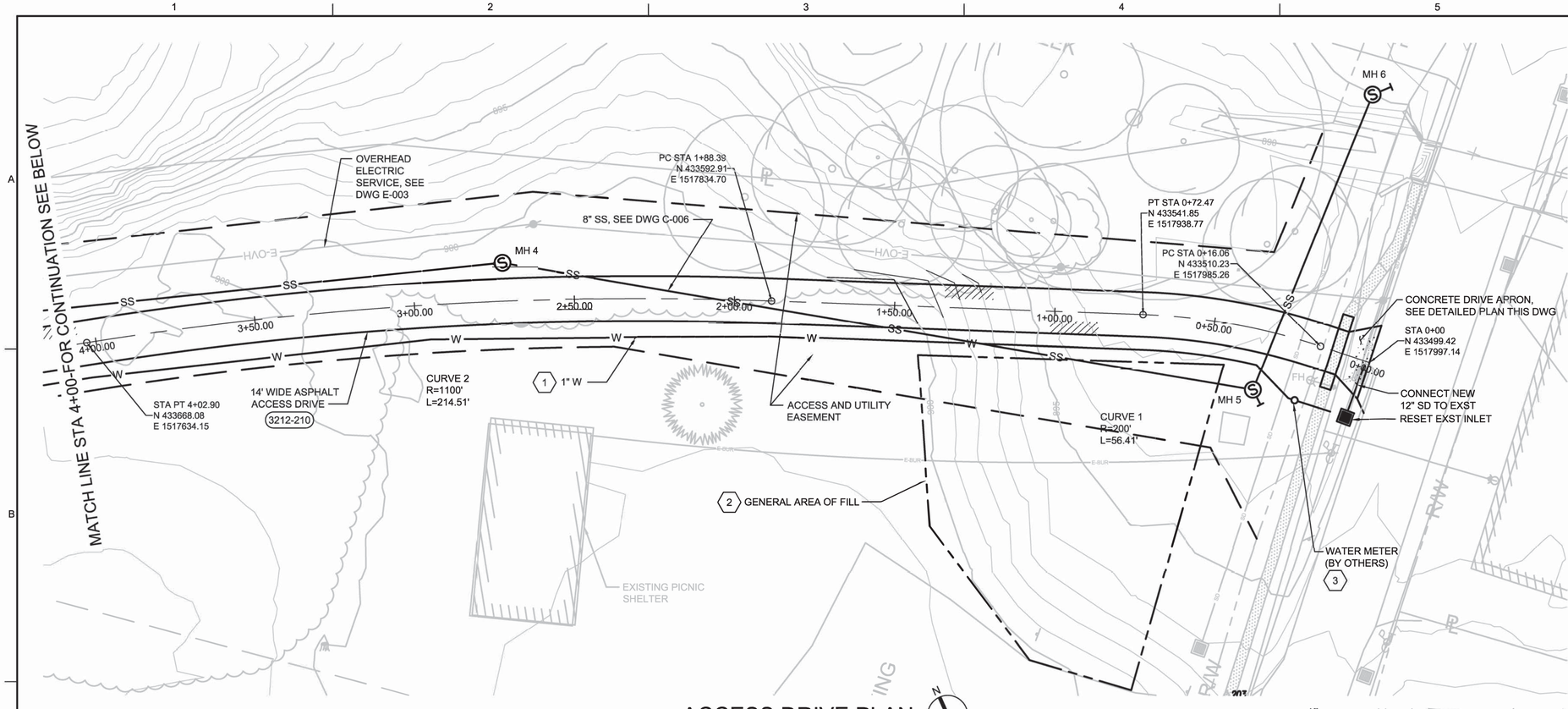

ACCESS DRIVE PLAN

1" = 20'-0"

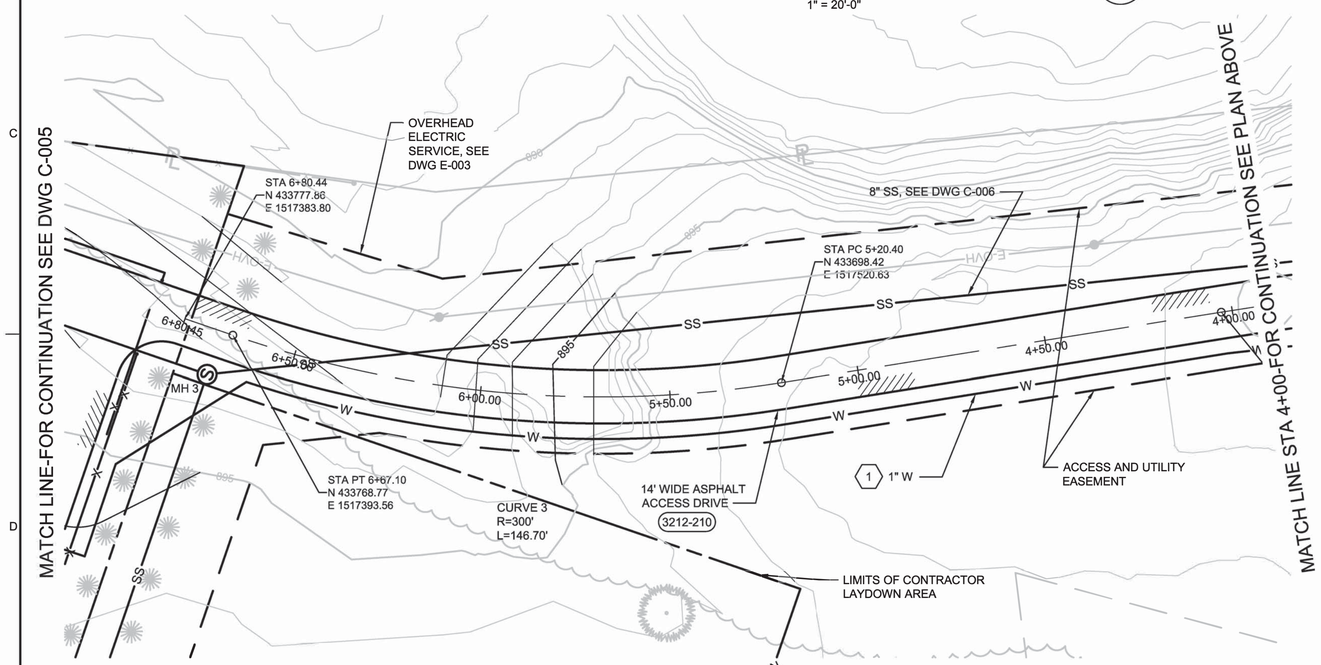

ACCESS DRIVE PLAN

1" = 20'-0"

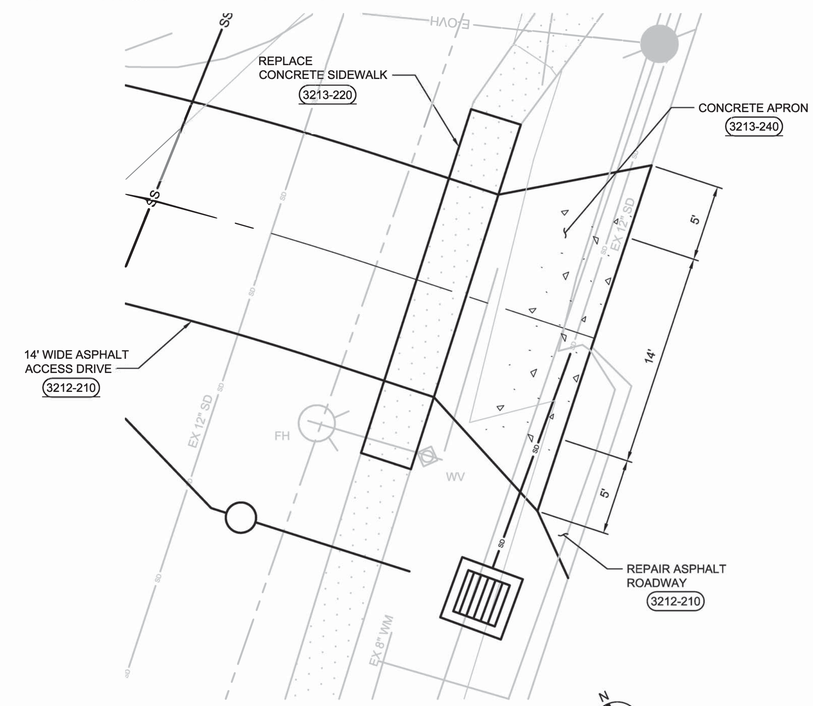

DRIVE APRON DETAIL

1" = 5'-0"

0 20 40 60
1"=20'-0"

0 5 10 15
1"=5'-0"

GENERAL SHEET NOTES

1. FINAL GRADE AND SEED ALL DISTRUBED AREAS PER SPECIFICATIONS.

SHEET KEYNOTES

1. NEW POTABLE WATER LINE SHALL BE 3'-6" MINIMUM BELOW FINISHED GRADE.
2. CONTRACTOR SHALL PLACE SURPLUS EXCAVATED MATERIAL WITHIN THE AREA SHOWN NORTH OF THE EXISTING GRAVEL PARKING LOT. THE FILL AREA SHALL BE RAISED NO HIGHER THAN NECESSARY TO MATCH GRAVEL SURFACE AND GRADED TO MAINTAIN SLOPE FROM SOUTHWEST TO NORTHEAST STOPPING PRIOR TO REACHING THE PROPOSED ACCESS DRIVE. COORDINATE WITH THE COUNTY'S ON SITE REPRESENTATIVE.
3. COUNTY SHALL PROVIDE WATER MAIN TAP, WATER SERVICE FROM MAIN TO METER, METER, AND SERVICE LINE 3'-0" PAST THE METER. CONNECT 1" W TO SERVICE LINE AND COORDINATE WITH THE COUNTY.

STATE OF OHIO
ALAN H. SMITH
REGISTERED
PROFESSIONAL ENGINEER

NO.	DATE	REVISION	BY	APVD

DSGN A SMITH | DR A SMITH | CHK D CORBETT | APVD J GAGNON | APVD A SMITH

©CH2M HILL 2015. ALL RIGHTS RESERVED.

REUSE OF DOCUMENTS: THIS DOCUMENT, AND THE IDEAS AND DESIGNS INCORPORATED HEREIN, AS AN INSTRUMENT OF PROFESSIONAL SERVICE, IS THE PROPERTY OF CH2M HILL AND IS NOT TO BE USED, IN WHOLE OR IN PART, FOR ANY OTHER PROJECT WITHOUT THE WRITTEN AUTHORIZATION OF CH2M HILL.

Clermont County

VILLAGE OF NEWTONSVILLE
WASTEWATER TREATMENT PLANT & COLLECTION SYSTEM - PART A
CLERMONT COUNTY WATER RESOURCES DEPARTMENT, CLERMONT COUNTY, OHIO

ch2m

CIVIL

ROADWAY PLAN 1

VARIES

VERIFY SCALE

BAR IS ONE INCH ON ORIGINAL DRAWING.
0 1"

DATE	2017-03-31
PROJ	665163
DWG	C-004
SHEET	6 of 91

BID READY

GENERAL SHEET NOTES

1. UNLESS A DIFFERENT SURFACE IS SHOWN, PROVIDE A MINIMUM 3-FT WIDE GRAVEL SURFACE AROUND SBR STRUCTURE AND AROUND TERTIARY FILTRATION AND DISINFECTION BUILDING. REFER TO DETAIL 3215-260.
2. FINAL GRADE AND SEED ALL DISTURBED AREAS PER SPECIFICATIONS.
3. REFER TO DETAIL 3213-250 FOR TRANSITION BETWEEN CONCRETE PAVEMENT AND ASPHALT PAVEMENT.

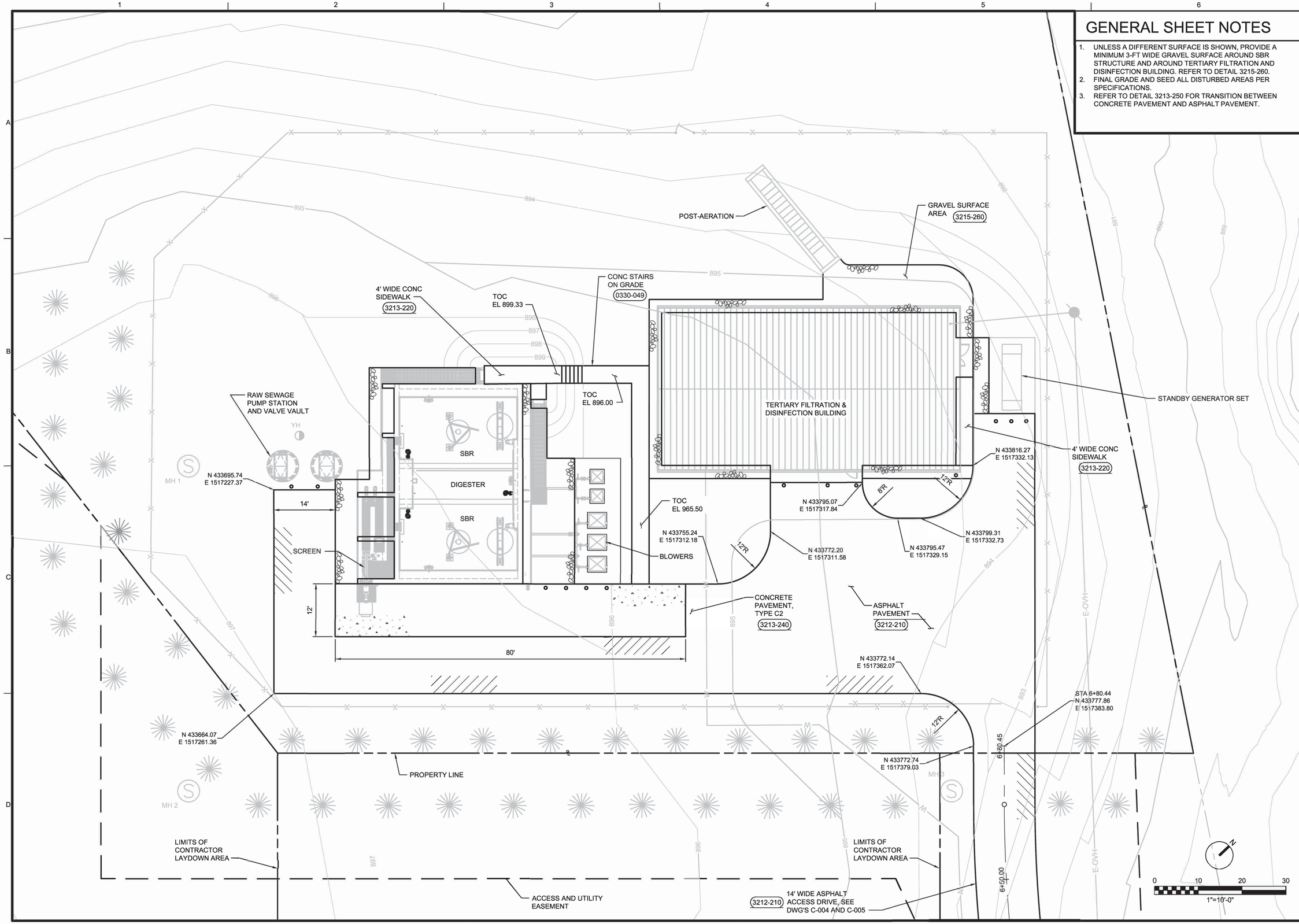

STATE OF OHIO ALAN H. SMITH 54340 REGISTERED PROFESSIONAL ENGINEER

NO.	DATE	REVISION	BY	APVD

DSGN A SMITH | DR A SMITH | CHK D CORBETT | APVD J GAGNON | BY A SMITH

©CH2M HILL 2015. ALL RIGHTS RESERVED.

REUSE OF DOCUMENTS: THIS DOCUMENT, AND THE IDEAS AND DESIGNS INCORPORATED HEREIN, AS AN INSTRUMENT OF PROFESSIONAL SERVICE, IS THE PROPERTY OF CH2M HILL AND IS NOT TO BE USED, IN WHOLE OR IN PART, FOR ANY OTHER PROJECT WITHOUT THE WRITTEN AUTHORIZATION OF CH2M HILL.

Clermont County

VILLAGE OF NEWTONSVILLE
WASTEWATER TREATMENT PLANT & COLLECTION SYSTEM - PART A
CLERMONT COUNTY WATER RESOURCES DEPARTMENT, CLERMONT COUNTY, OHIO

ch2m

CIVIL

ROADWAY PLAN 2

1"=10'

VERIFY SCALE

BAR IS ONE INCH ON ORIGINAL DRAWING.
0 1"

DATE	2017-03-31
PROJ	665163
DWG	C-005
SHEET	7 of 91

BID READY

MANHOLE	NORTHING	EASTING
1	433,685.20	1,517,210.13
2	433,634.64	1,517,264.37
3	433,762.08	1,517,383.13
4	433,637.99	1,517,762.78
5	433,506.41	1,517,960.51
6	433,575.30	1,517,032.06

0 20 40 60 80
HORIZONTAL SCALE: 1" = 40'

0 2.5 5 7.5 10
VERTICAL SCALE: 1" = 5'

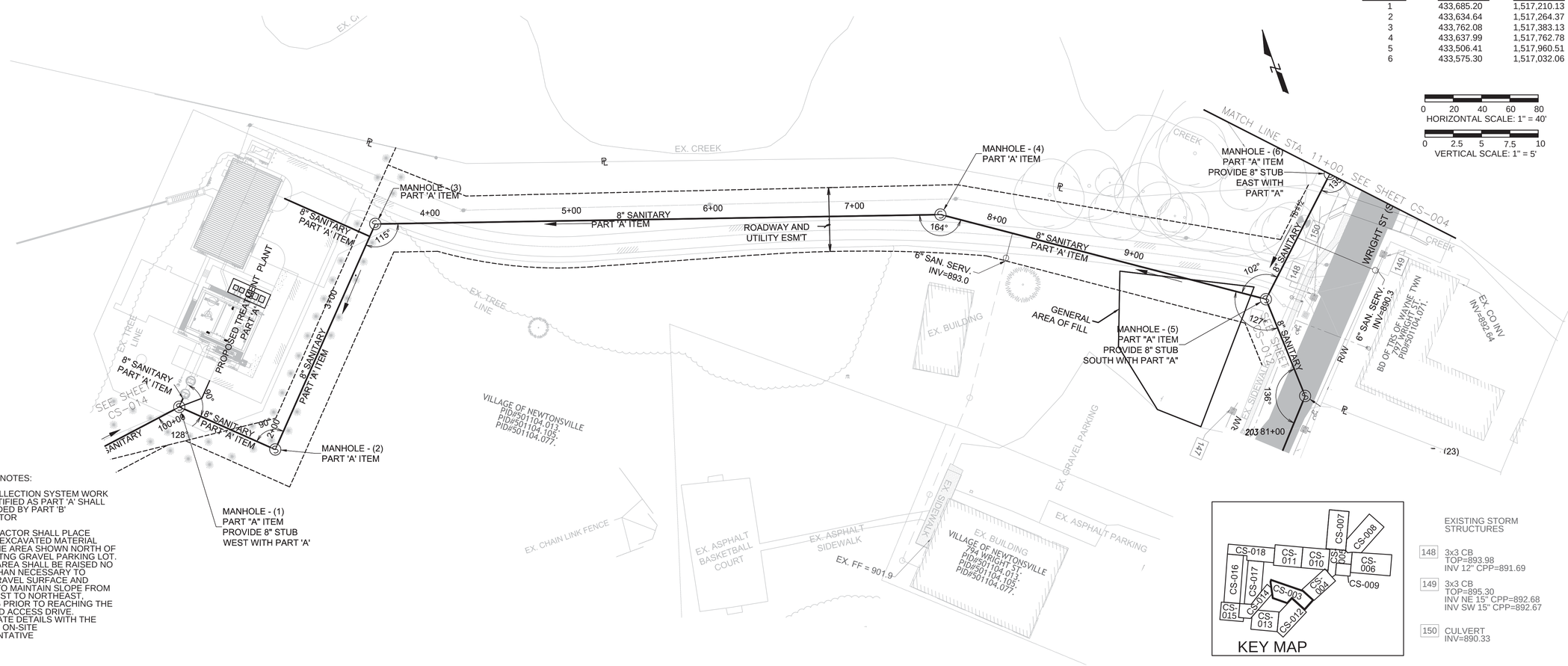

GENERAL NOTES:

1) ALL COLLECTION SYSTEM WORK NOT IDENTIFIED AS PART 'A' SHALL BE PROVIDED BY PART 'B' CONTRACTOR

2) CONTRACTOR SHALL PLACE SURPLUS EXCAVATED MATERIAL WITHIN THE AREA SHOWN NORTH OF THE EXISITNG GRAVEL PARKING LOT. THE FILL AREA SHALL BE RAISED NO HIGHER THAN NECESSARY TO MATCH GRAVEL SURFACE AND GRADED TO MAINTAIN SLOPE FROM SOUTHWEST TO NORTHEAST, STOPPING PRIOR TO REACHING THE PROPOSED ACCESS DRIVE. COORDINATE DETAILS WITH THE COUNTY'S ON-SITE REPRESENTATIVE

EXISTING STORM STRUCTURES

148 3x3 CB
TOP=893.98
INV 12" CPP=891.69

149 3x3 CB
TOP=895.30
INV NE 15" CPP=892.68
INV SW 15" CPP=892.67

150 CULVERT
INV=890.33

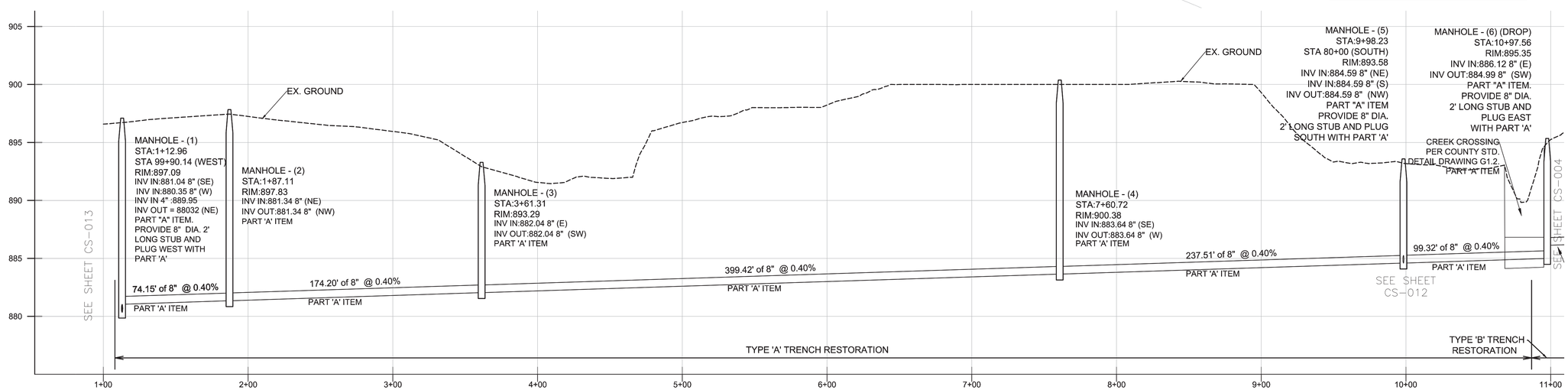

STATE OF OHIO DANIEL JOSEPH MARTIN 70395 REGISTERED PROFESSIONAL ENGINEER

NO.	DATE	REVISION	BY	APVD

DSGN D. MARTIN | DR E. HAMMONS | CHK A. SMITH | APVD D. MARTIN

©CH2M HILL 2015. ALL RIGHTS RESERVED.

VILLAGE OF NEWTONSVILLE
WASTEWATER TREATMENT PLANT & COLLECTION SYSTEM - PART B
CLERMONT COUNTY WATER RESOURCES DEPARTMENT, CLERMONT COUNTY, OHIO

Clermont County

ch2m

RA Consultants, LLC Engineers and Surveyors

CIVIL

PART "A" SANITARY SEWER PLAN AND PROFILE

1"=40'

VERIFY SCALE
BAR IS ONE INCH ON ORIGINAL DRAWING.
0 1"

DATE	2017-03-31
PROJ	665163
DWG	C-006
SHEET	8 of 91

REUSE OF DOCUMENTS: THIS DOCUMENT, AND THE IDEAS AND DESIGNS INCORPORATED HEREIN, AS AN INSTRUMENT OF PROFESSIONAL SERVICE, IS THE PROPERTY OF CH2M HILL AND IS NOT TO BE USED, IN WHOLE OR IN PART, FOR ANY OTHER PROJECT WITHOUT THE WRITTEN AUTHORIZATION OF CH2M HILL.

BID READY

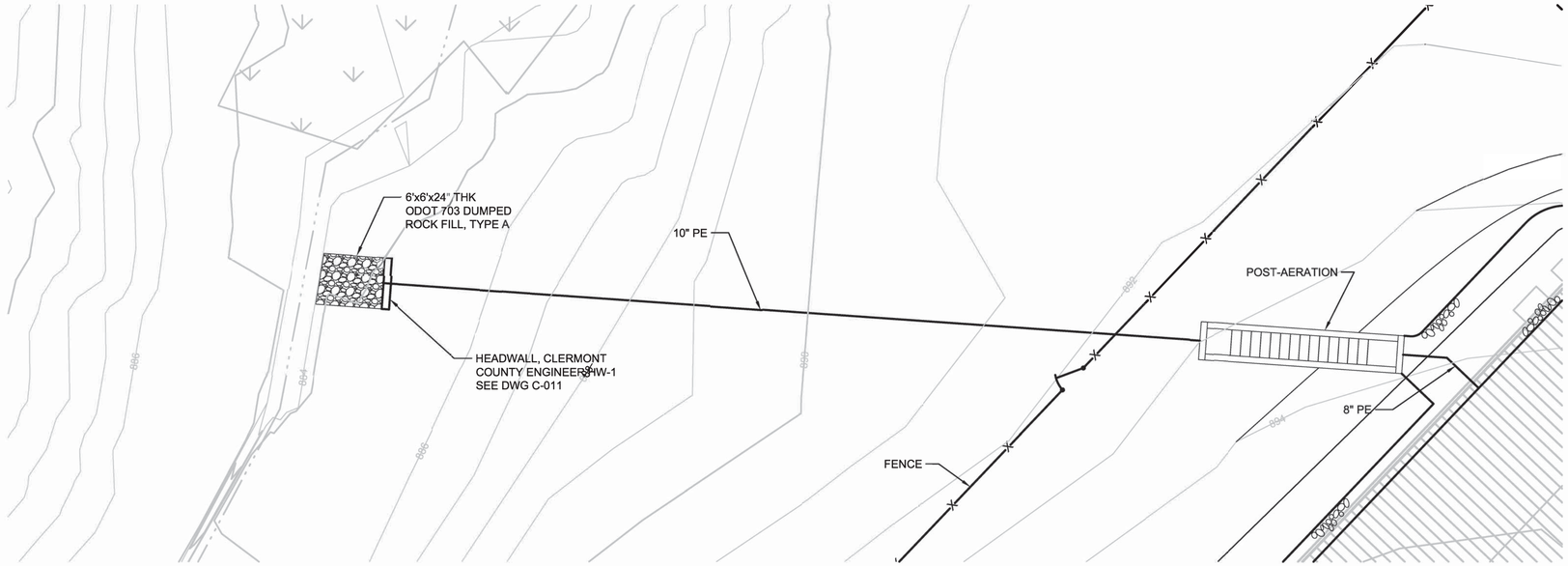

OUTFALL PLAN

1" = 10'-0"

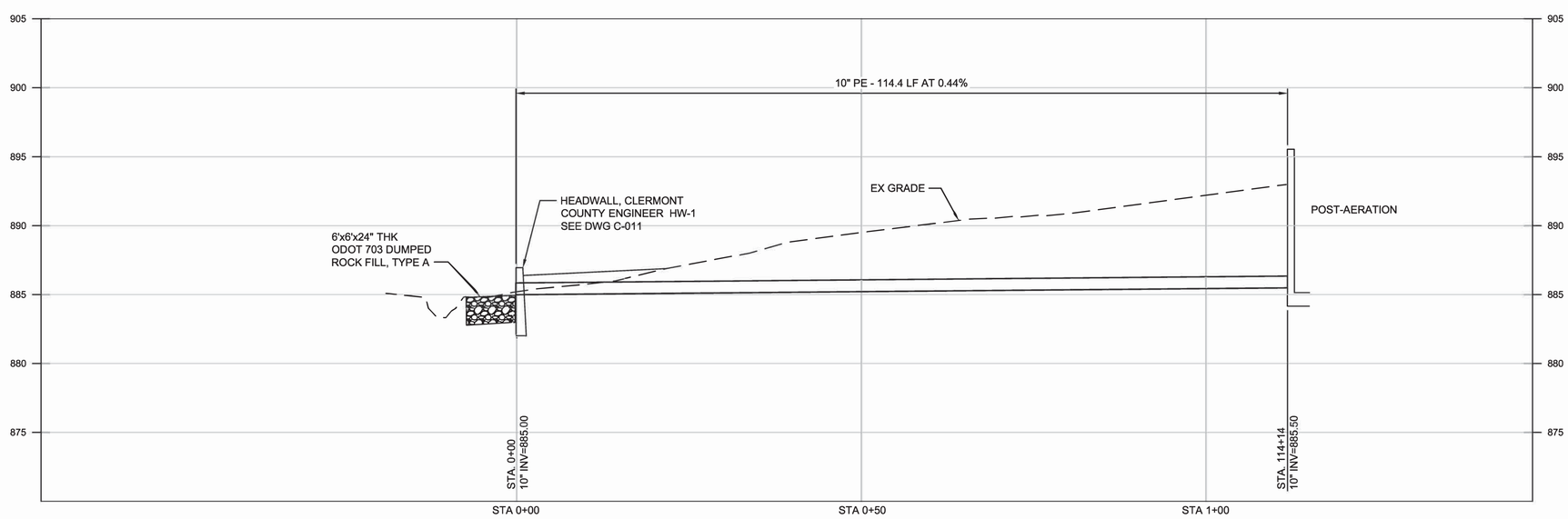

OUTFALL PROFILE

H:1" = 10'-0" V:1"=2'-0"

N

0 10 20 30

1"=10'-0"

NO.	DATE	REVISION	BY	APVD

DSGN A SMITH | DR A SMITH | CHK D CORBETT | APVD J GAGNON | APVD A SMITH

STATE OF OHIO ALAN H SMITH E-24840 REGISTERED PROFESSIONAL ENGINEER

©CH2M HILL 2015. ALL RIGHTS RESERVED.

Clermont County

VILLAGE OF NEWTONSVILLE
WASTEWATER TREATMENT PLANT &
COLLECTION SYSTEM - PART A
CLERMONT COUNTY WATER RESOURCES
DEPARTMENT, CLERMONT COUNTY, OHIO

ch2m

CIVIL

OUTFALL SEWER PLAN AND PROFILE

REUSE OF DOCUMENTS: THIS DOCUMENT, AND THE IDEAS AND DESIGNS INCORPORATED HEREIN, AS AN INSTRUMENT OF PROFESSIONAL SERVICE, IS THE PROPERTY OF CH2M HILL AND IS NOT TO BE USED, IN WHOLE OR IN PART, FOR ANY OTHER PROJECT WITHOUT THE WRITTEN AUTHORIZATION OF CH2M HILL.

VARIES

VERIFY SCALE

BAR IS ONE INCH ON ORIGINAL DRAWING.
0 1"

DATE	2017-03-31
PROJ	665163
DWG	C-007
SHEET	9 of 91

BID READY

TREE ID	BOTANICAL/COMMON NAME	HGT	QTY	DETAIL
#1	PINUS STROBUS/EASTERN WHITE PINE	6'	24	3292-620
#2	PICEA OMORIKA/NORWAY SPRUCE	6'	19	3292-620

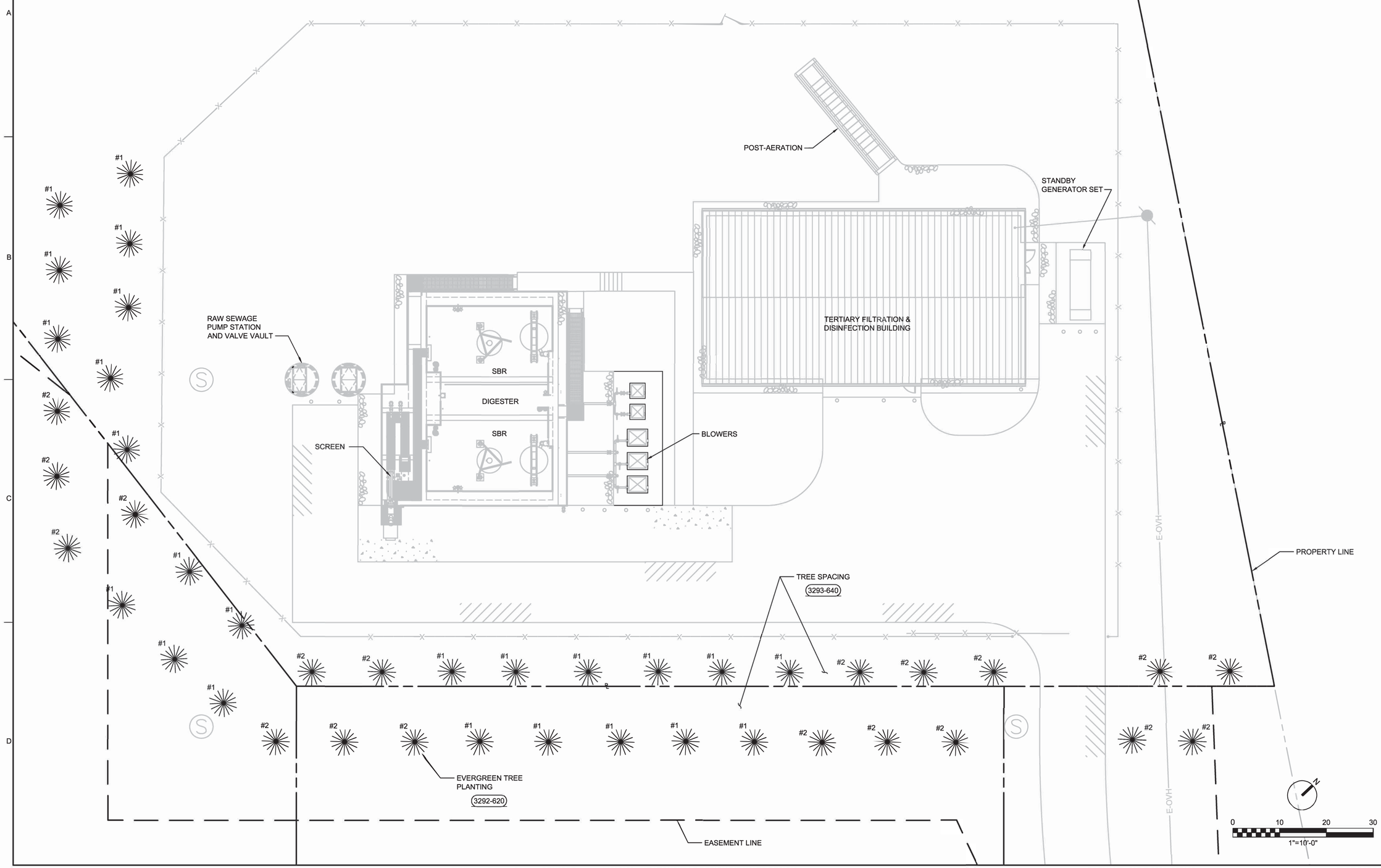

STATE OF OHIO ALAN H. SMITH 65440 REGISTERED PROFESSIONAL ENGINEER

NO.	DATE	REVISION	BY	APVD

DSGN A SMITH | DR A SMITH | CHK D CORBETT | APVD J GAGNON | BY A SMITH | APVD

REUSE OF DOCUMENTS: THIS DOCUMENT, AND THE IDEAS AND DESIGNS INCORPORATED HEREIN, AS AN INSTRUMENT OF PROFESSIONAL SERVICE, IS THE PROPERTY OF CH2M HILL AND IS NOT TO BE USED, IN WHOLE OR IN PART, FOR ANY OTHER PROJECT WITHOUT THE WRITTEN AUTHORIZATION OF CH2M HILL.

©CH2M HILL 2015. ALL RIGHTS RESERVED.

Clermont County

VILLAGE OF NEWTONSVILLE
WASTEWATER TREATMENT PLANT & COLLEGTION SYSTEM - PART A
CLERMONT COUNTY WATER RESOURCES DEPARTMENT, CLERMONT COUNTY, OHIO

ch2m

CIVIL

LANDSCAPING PLAN

1"=10'

VERIFY SCALE

BAR IS ONE INCH ON ORIGINAL DRAWING.
0 1"

DATE	2017-03-31
PROJ	665163
DWG	C-008
SHEET	10 of 91

BID READY

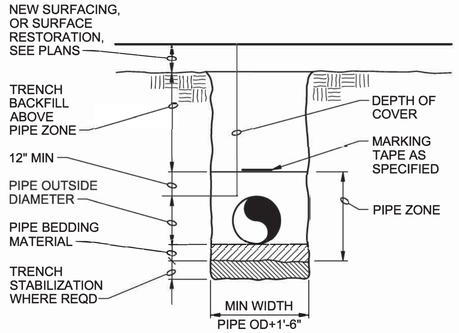

NOTES:

1. CONTRACTOR SHALL SLOPE TRENCH WALLS OR SHORE EXCAVATIONS FOR CONSTRUCTION AND SAFETY AND IN ACCORDANCE WITH CURRENT OSHA REQUIREMENTS.
2. FOUNDATION STABILIZATION MATERIAL SHALL BE INSTALLED ONLY AS APPROVED AND DIRECTED BY THE ENGINEER AND IN ACCORDANCE WITH THE SPECIFICATIONS.

TYPICAL TRENCH

NTS

3123-110

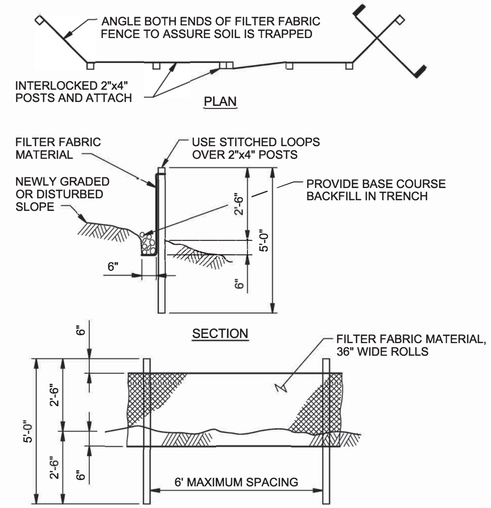

NOTES:

1. BURY BOTTOM OF FILTER FABRIC 6" VERTICALLY BELOW FINISHED GRADE.
2. 2"x4" DOUGLAS FIR OR STEEL FENCE POSTS.
3. STITCHED LOOPS TO BE INSTALLED DOWNHILL SIDE OF SLOPE.
4. COMPACT ALL AREAS OF FILTER FABRIC TRENCH.

SEDIMENT FENCE

NTS

3125-165

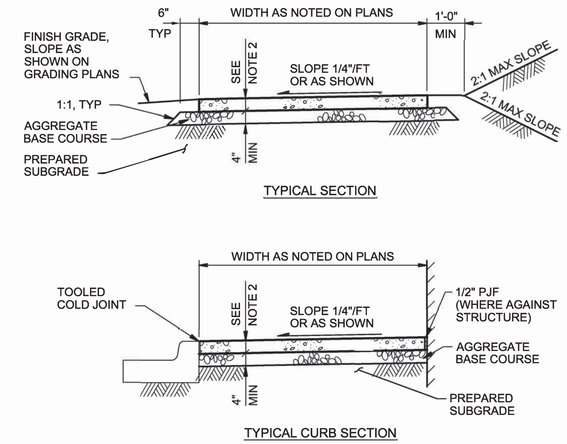

NOTES:

1. SIDEWALKS 8 FEET AND WIDER SHALL HAVE A LONGITUDINAL CONTRACTION JOINT AT THE MIDPOINT.
2. CONCRETE DEPTH FOR STANDARD SIDEWALKS SHALL BE NOMINAL 4" MINIMUM, THICKNESS IN DRIVEWAY SHALL BE 6" MINIMUM.

TYPICAL CONCRETE SIDEWALK

NTS

3213-220

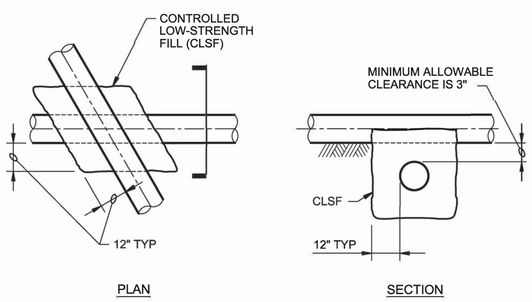

NOTES:

CLSF SUPPORT IS REQUIRED:

1. WHEN BOTH PIPELINES ARE NEW AND CLEARANCE BETWEEN THEM IS LESS THAN 12".
2. WHEN A NEW PIPELINE IS CROSSING OVER AN EXISTING PIPELINE AND THE CLEARANCE BETWEEN THEM IS LESS THAN 12".
3. AT ALL PIPE CROSSINGS WHERE A NEW PIPELINE IS CROSSING UNDER AN EXISTING PIPELINE.
4. REFER TO SPECIFICATION SECTION 31 23 23 FOR CLSF REQUIREMENTS.

TRENCH PIPE CROSSING

NTS

3123-120

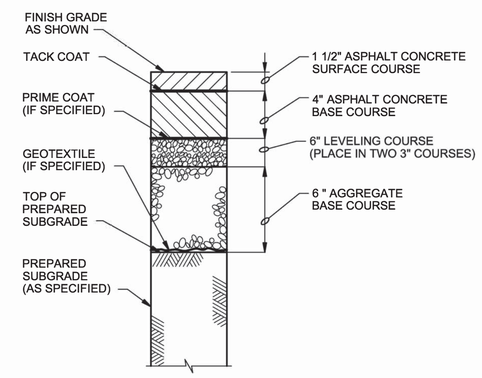

NOTE:

PROVIDE ASPHALT CONCRETE PAVEMENT TYPE AS SHOWN ON PLANS.

ASPHALT CONCRETE PAVEMENT

NTS

3212-210

PAVEMENT TYPE(S) SEE NOTE 5	DIMENSION (INCHES)		REINFORCING
	A	B	C
CI	6"	6"	#4@12" CTD 2" COVER
C2	8"	6"	#5@12" CTD 2 1/2" COVER
C3	10"	6"	#4@12" T&B 1/2" AND 3" COVER

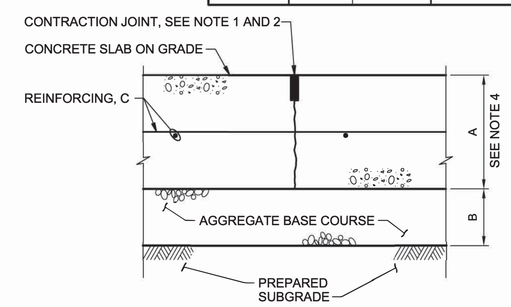

NOTES:

1. CONTRACTION JOINT SHALL BE MADE, CLEANED WITH COMPRESSED AIR, AND FILLED WITH SEALANT AS SPECIFIED. DEPTH SHALL BE 1/3" THICKNESS OF CONCRETE SLAB.
2. CONCRETE JOINT SPACING: REFER TO AND COMPLY WITH SECTION 32 13 13 CONCRETE PAVING.
3. INSTALL 1/2" PREMOLDED JOINT FILLER FULL DEPTH WHERE CONCRETE PAVEMENT ABUTS CONCRETE CURB, BUILDING OR ANY RIGID STRUCTURE.
4. PROVIDE A 12" THICK BY 18" WIDE THICKENED EDGE AROUND PERIMETER OF SLAB. TRANSITION THICKENED EDGE TO NORMAL 8" THICKNESS IN 18".
5. PROVIDE PORTLAND CEMENT CONCRETE PAVEMENT TYPE AS SHOWN ON PLANS.

CONCRETE PAVEMENT

NTS

3213-240

STATE OF OHIO ALAN H. SMITH 54340 REGISTERED PROFESSIONAL ENGINEER

NO.	DATE	REVISION	BY	APVD

DSGN A SMITH | DR A SMITH | CHK D CORBETT | APVD J GAGNON | APVD A SMITH

©CH2M HILL 2015. ALL RIGHTS RESERVED.

REUSE OF DOCUMENTS: THIS DOCUMENT, AND THE IDEAS AND DESIGNS INCORPORATED HEREIN, AS AN INSTRUMENT OF PROFESSIONAL SERVICE, IS THE PROPERTY OF CH2M HILL AND IS NOT TO BE USED, IN WHOLE OR IN PART, FOR ANY OTHER PROJECT WITHOUT THE WRITTEN AUTHORIZATION OF CH2M HILL.

Clermont County

VILLAGE OF NEWTONSVILLE
WASTEWATER TREATMENT PLANT & COLLECTION SYSTEM - PART A
CLERMONT COUNTY WATER RESOURCES DEPARTMENT, CLERMONT COUNTY, OHIO

ch2m

CIVIL

DETAILS 1

NTS

VERIFY SCALE

BAR IS ONE INCH ON ORIGINAL DRAWING.
0 1"

DATE	2017-03-31
PROJ	652379
DWG	C-009
SHEET	11 of 91

BID READY

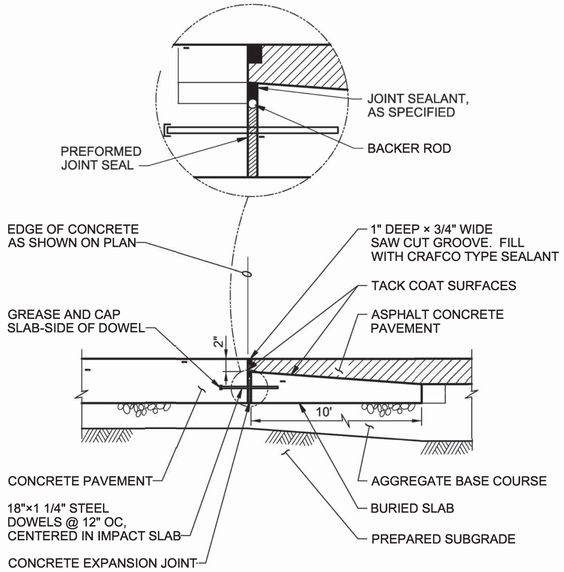

CONCRETE TO ASPHALT TRANSITION

NTS

3213-250

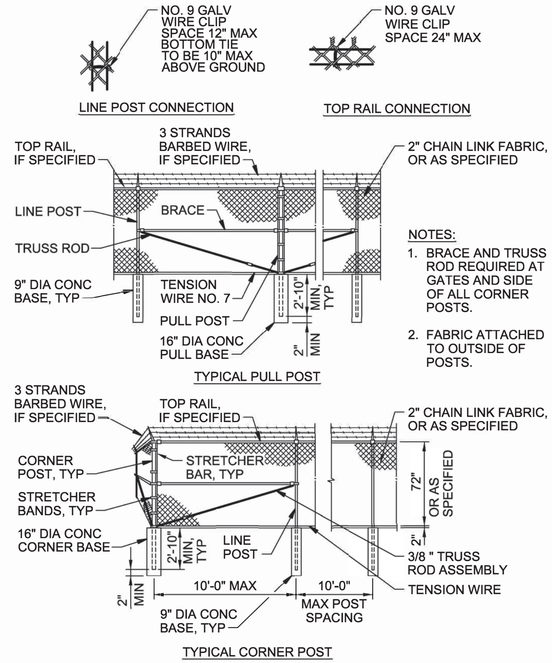

NOTES:

1. BRACE AND TRUSS ROD REQUIRED AT GATES AND SIDE OF ALL CORNER POSTS.
2. FABRIC ATTACHED TO OUTSIDE OF POSTS.

CHAIN LINK FENCE

NTS

3231-410

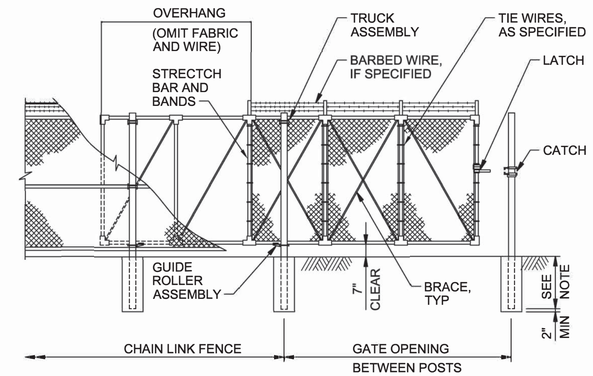

NOTE:

POST SETS PER MANUFACTURER'S RECOMMENDATIONS FOR GATE OPENING AND GATE POST SIZES.

CANTILEVER SLIDE GATE

NTS

3231-425

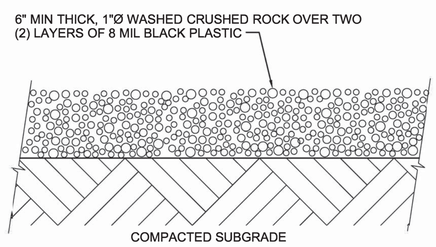

NOTES:

1. PROVIDE WHERE SHOWN OR NOTED

GRAVEL SURFACING

NTS

3215-260

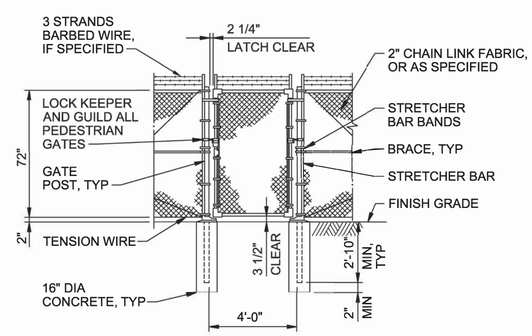

PEDESTRIAN GATE

NTS

3231-420

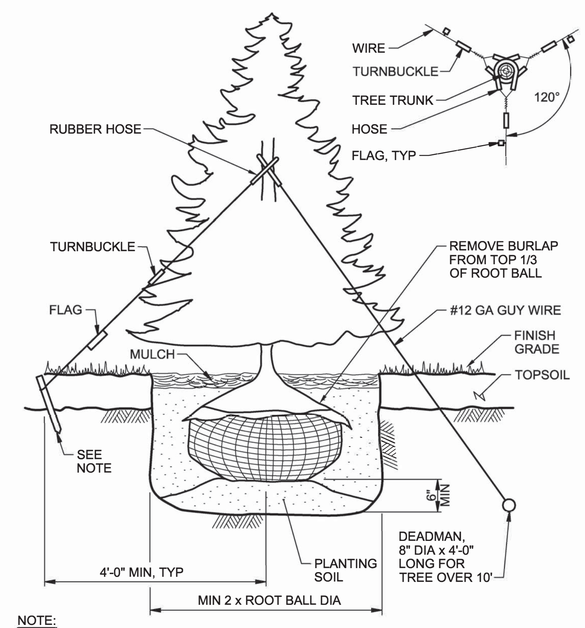

NOTE:

3'-0" LONG 2"x2" WOOD STAKE FOR TREES UNDER 10'.

EVERGREEN TREE PLANTING

NTS

3292-620

NO.	DATE	REVISION	BY	APVD

DSGN A SMITH | DR A SMITH | CHK D CORBETT | APVD J GAGNON | APVD A SMITH

VILLAGE OF NEWTONSVILLE
WASTEWATER TREATMENT PLANT & COLLECTION SYSTEM - PART A
CLERMONT COUNTY WATER RESOURCES DEPARTMENT, CLERMONT COUNTY, OHIO

CIVIL

DETAILS 2

NTS

VERIFY SCALE

BAR IS ONE INCH ON ORIGINAL DRAWING.
0 1"

DATE	2017-03-31
PROJ	652379
DWG	C-010
SHEET	12 of 91

BID READY

REUSE OF DOCUMENTS: THIS DOCUMENT, AND THE IDEAS AND DESIGNS INCORPORATED HEREIN, AS AN INSTRUMENT OF PROFESSIONAL SERVICE, IS THE PROPERTY OF CH2M HILL AND IS NOT TO BE USED, IN WHOLE OR IN PART, FOR ANY OTHER PROJECT WITHOUT THE WRITTEN AUTHORIZATION OF CH2M HILL.

©CH2M HILL 2015. ALL RIGHTS RESERVED.

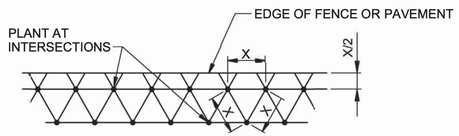

NOTES:

1. X=15'

TREE SPACING

NTS

3293-640

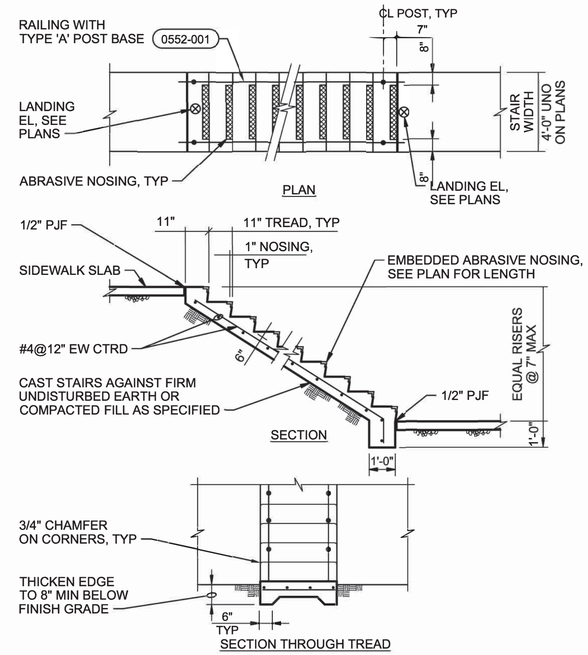

CONCRETE STAIRS-ON GRADE

0330-049

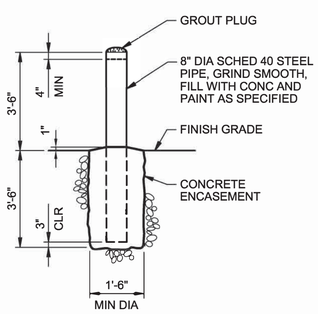

GUARD POST - EXTERIOR

NTS

3471-810

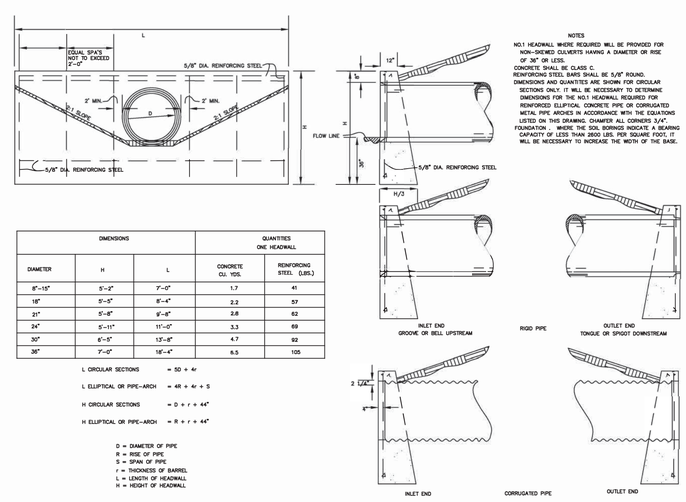

NOTES

NO.1 HEADWALL WHERE REQUIRED WILL BE PROVIDED FOR NON-SKEWED CULVERTS HAVING A DIAMETER OR RISE OF 36" OR LESS.
CONCRETE SHALL BE CLASS C.
REINFORCING STEEL BARS SHALL BE 5/8" ROUND.
DIMENSIONS AND QUANTITIES ARE SHOWN FOR CIRCULAR SECTIONS ONLY. IT WILL BE NECESSARY TO DETERMINE DIMENSIONS FOR THE NO.1 HEADWALL REQUIRED FOR REINFORCED ELLIPTICAL CONCRETE PIPE OR CORRUGATED METAL PIPE ARCHES IN ACCORDANCE WITH THE EQUATIONS LISTED ON THIS DRAWING. CHAMFER ALL CORNERS 3/4".
FOUNDATION . WHERE THE SOIL BORINGS INDICATE A BEARING CAPACITY OF LESS THAN 2600 LBS. PER SQUARE FOOT, IT WILL BE NECESSARY TO INCREASE THE WIDTH OF THE BASE.

DIMENSIONS			QUANTITIES ONE HEADWALL	
DIAMETER	H	L	CONCRETE CU. YDS.	REINFORCING STEEL (LBS.)
8"-15"	5'-2"	7'-0"	1.7	41
18"	5'-5"	8'-4"	2.2	57
21"	5'-8"	9'-8"	2.8	62
24"	5'-11"	11'-0"	3.3	69
30"	6'-5"	13'-8"	4.7	92
36"	7'-0"	16'-4"	6.5	105

L CIRCULAR SECTIONS = 50 + 4r

L ELLIPTICAL OR PIPE-ARCH = 4R + 4r + S

H CIRCULAR SECTIONS = D + r + 44"

H ELLIPTICAL OR PIPE-ARCH = R + r + 44"

D = DIAMETER OF PIPE
R = RISE OF PIPE
S = SPAN OF PIPE
r = THICKNESS OF BARREL
L = LENGTH OF HEADWALL
H = HEIGHT OF HEADWALL

HEADWALLS HW-1

STD0017

STATE OF OHIO ALAN H. SMITH 54940 REGISTERED PROFESSIONAL ENGINEER

NO.	DATE	REVISION	BY	APVD

DSGN A SMITH | DR A SMITH | CHK D CORBETT | APVD J GAGNON | BY A SMITH | APVD

©CH2M HILL 2015. ALL RIGHTS RESERVED.

Clermont County

VILLAGE OF NEWTONSVILLE
WASTEWATER TREATMENT PLANT & COLLECTION SYSTEM - PART A
CLERMONT COUNTY WATER RESOURCES DEPARTMENT, CLERMONT COUNTY, OHIO

ch2m

CIVIL

DETAILS 3

REUSE OF DOCUMENTS: THIS DOCUMENT, AND THE IDEAS AND DESIGNS INCORPORATED HEREIN, AS AN INSTRUMENT OF PROFESSIONAL SERVICE, IS THE PROPERTY OF CH2M HILL AND IS NOT TO BE USED, IN WHOLE OR IN PART, FOR ANY OTHER PROJECT WITHOUT THE WRITTEN AUTHORIZATION OF CH2M HILL.

NTS

VERIFY SCALE

BAR IS ONE INCH ON ORIGINAL DRAWING.
0 1"

DATE	2017-03-31
PROJ	665163
DWG	C-011
SHEET	13 of 91

BID READY

ARCHITECTURAL/STRUCTURAL LEGEND

SYMBOL	LEGEND
X	GRID / COLUMN INDICATOR
ROOM NAME XX101 OR ROOM NAME 101	ROOM IDENTIFIER
"XX" = FACILITY INDICATOR (IF SHOWN); DOOR LETTER; ROOM NUMBER; XX101A	DOOR IDENTIFIER
XXW-1 OR W-1	WINDOW IDENTIFIER
XXL-1 OR L-1	LOUVER IDENTIFIER
SX	SIGNAGE IDENTIFIER
110.50	SPOT ELEVATION INDICATOR
XXXX EL XX.XX	ELEVATION DATUM (IN FEET)
	DIRECTION OF SLOPE DOWN
HINGE SIDE	HATCH SWING INDICATOR
ACTIVE; INACTIVE; XX101A	INDICATES PAIR OF DOORS (DOOR # ON ACTIVE)
F.EXT-X (IN CABINET); F.EXT-X (ON BRACKET)	FIRE EXTINGUISHER "X" = NUMBER IN SPECIFICATIONS
CJI	CONTROL JOINT
X" EJ	EXPANSION JOINT X" = DIMENSION
POST	RAILINGS
S-X	SLAB INDICATOR
X	COLUMN INDICATOR
X	WALL INDICATOR
B-X	BEAM INDICATOR

ARCH/STRUCT MATERIAL SYMBOLS

SYMBOL	LEGEND
	GRATING, SPAN DIRECTION INDICATED
	CHECKERED PLATE
	GROUT
	GRANULAR FILL
	EARTH OR FINISH GRADE
	CONCRETE
	CMU WALL (PLAN)
	CMU WALL (SECTION)
	METAL STUD WALL (PLAN)
	RIGID INSULATION
	BATT INSULATION
	STEEL
	ALUMINUM
	PLYWOOD
	GYPSUM WALLBOARD
	WOOD, ROUGH CONTINUOUS
	WOOD, ROUGH NON-CONTINUOUS
	WOOD, FINISHED

LIFE SAFETY LEGEND:

- EGRESS PATH "X" = DISTANCE
- "X" DOOR CLEAR OPENING
- ONE SIDED EXIT LIGHT
- F. EXT-X - FIRE EXTINGUISHER W/ BRACKET SEE SPECIFICATION 10 44 00 FOR ADDITIONAL INFORMATION
- SX SIGN - SEE SPECIFICATION 10 14 00 SIGNAGE

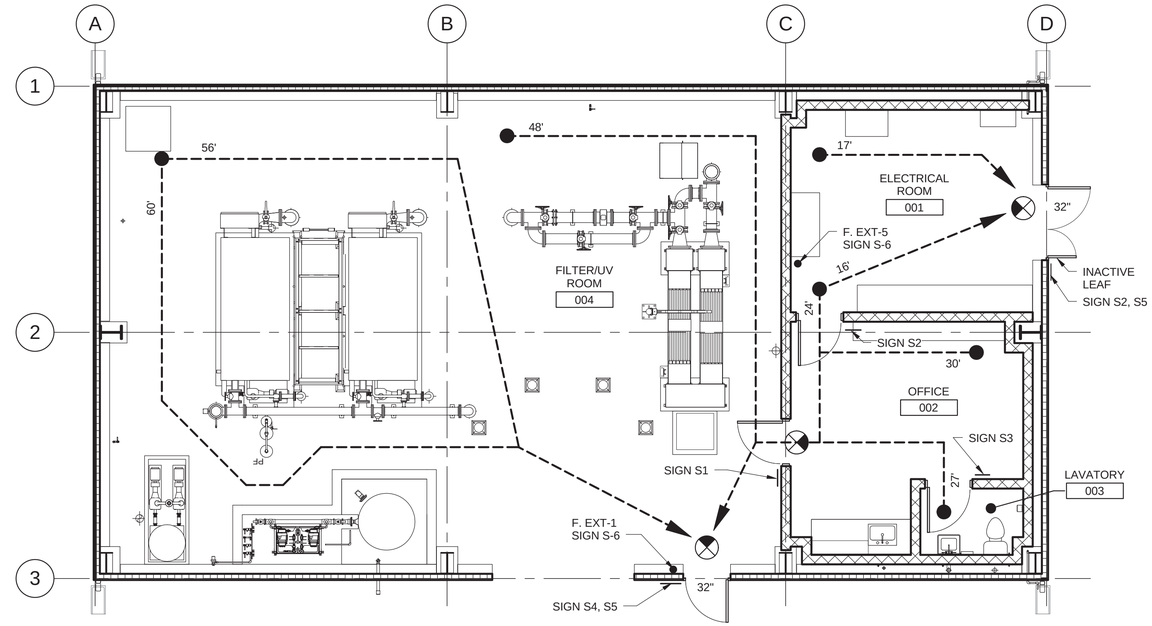

EGRESS PLAN

3/16" = 1'-0"

CODE DATA

REQUIRED FIRE RESISTANT RATINGS

BUILDING ELEMENTS (TABLE 601)	
STRUCTURAL FRAME	0
EXTERIOR BEARING WALLS	0
INTERIOR BEARING WALLS	0
INTERIOR NON-BEARING WALLS	0
FLOOR CONSTRUCTION	0
ROOF CONSTRUCTION	0
SHAFT ENCLOSURE (707.4)	N/A
STAIRWAY ENCLOSURE (1019.1)	N/A
CORRIDOR (TABLE 1016.1)	N/A
ALLOWABLE AREA OF EXTERIOR DOORS AND WINDOWS (704.8)	N/A
OCCUPANCY SEPARATIONS (IBC 508.3.3)	N/A
INCIDENTAL USE AREAS (508.2)	N/A
ACCESSORY USE AREAS (508.3.1)	N/A
NON-SEPARATED USE (508.3.2)	N/A
FIRE SEPARATION DISTANCE (TABLE 602)	> 20 FT = 0 HR
DISTANCE FROM ADJACENT BUILDING OR PROPERTY LINE	> 20 FT = 0 HR

INTERIOR FINISHES (IBC 803.5)

OCCUPANCY: F-2	AREA: ALL	CLASSIFICATION: MIN. C
OCCUPANCY:	AREA:	CLASSIFICATION:

INSULATION REQUIREMENTS

INSULATION (R-VALUE):
- ROOF: R=30
- WALLS: R=19
- DOORS:
- WINDOWS:

GLAZING PERCENTAGE:
- WINDOW: NOT APPLICABLE
- SKYLIGHT:

OTHER:
- DAYLIGHT CONTROLS:
- PERIMETER SLAB INSULATION: R=10

FIRE PROTECTION

SPRINKLERS (IBC SECT 903)	NOT REQUIRED
FIRE EXTINGUISHERS (SECT 906)	PROVIDED

CODE DATA

OCCUPANCY / EGRESS INFORMATION

DESIGN OCCUPANCY (TABLE 1004.1.2) 1/100 SF	16 PERSONS/FLOOR
ACTUAL NUMBER OF OCCUPANCY:	5
EGRESS WIDTH BASED ON OCCUPANCY (TABLE 1005.1)	.3 X 16 = 4.8" 32" PROVIDED

EXIT REQUIREMENTS

REQUIRED EXITS (IBC 1014.1 & 1018):	1 PROVIDED
MAX.TRAVEL DISTANCE ALLOWED: (TABLE 1015.1)	75 FEET
MAX. COMMON PATH TRAVEL: (IBC 1013.3)	75 FEET
MAX. DEAD ENDS: (TABLE 1016.3)	N/A
CORRIDOR WIDTH (IBC 1016.2):	N/A
MIN. EGRESS WIDTH (IBC 1005.1):	36" EGRESS ROUTE PROVIDED

PLUMBING FIXTURES (TABLE 2902.1)

OCCUPANCY	F-2							
MINIMUM FIXTURE COUNT	WC		LAV		SHOWER	0	SINK	
	M	F	M	F	DF	1	SS	1
	1	1	1	1				
ACTUAL FIXTURE COUNT	WC		LAV		SHOWER	0	SINK	
	M	F	M	F	DF	0	SS	1
	UNISEX 1		UNISEX 1					
URINALS (419.2 IPC)	NOT MORE THAN 50% OF WC REQ.							
TRAVEL DISTANCE (2902.4.1)	N/A							
TRAVEL DISTANCE EXCEPTION (LOCAL FACILITY NOT PROVIDED) [IBC 2902.4.1]	APPROVED BY OFFICIAL:							

CODE DATA

APPLICABLE CODES:

2011	OHIO BUILDING CODE
2011	OHIO MECHANICAL CODE
2011	OHIO FIRE CODE
2011	OHIO PLUMBING CODE
2009	INTERNATIONAL ENERGY CONSERVATION CODE
2014	NATIONAL ELECTRIC CODE

PROJECT DESCRIPTION

THE PROPOSED BUILDING ENCLOSURE IS A PRE-ENGINEERED METAL BUILDING. SEE SPECIFICATION 13 34 19 METAL BUILDING SYSTEMS.

GENERAL INFORMATION

USE AND OCCUPANCY CLASSIFICATION (CHAPTER 3)	GROUP: F-2 LOW HAZARD FACTORY INUSTRIAL
CONSTRUCTION CLASSIFICATION (IBC 602 & TABLE 503)	VB

AREA AND HEIGHT LIMITATIONS

MAXIMUM ALLOWABLE AREA (TABLE 503)	13,000 SF
ALLOWABLE AREA A = T + [TF/100] + [TS/100}	
OCCUPANCY:	NOT APPLICABLE (N/A)
TABULAR AREA (T) [TABLE 503]:	N/A
SPRINKLER INCREASE (S) [506.3]:	N/A
FRONTAGE INCREASE (F) [506.2]:	N/A
ALLOWABLE AREA PER FLOOR (A):	N/A
ACTUAL AREA:	1605.9 SF
INDUSTRIAL EQUIPMENT PLATFORM (IBC 505.5):	AREA:
MAXIMUM ALLOWABLE STORIES (TABLE 503)	2
ACTUAL NUMBER OF STORIES:	1
MAXIMUM ALLOWABLE HEIGHT (TABLE 503)	40 FT
ACTUAL HEIGHT:	17'-6"+
	NOT APPLICABLE

STATE OF OHIO REGISTERED ARCHITECT BETH TRAUTWEIN 12 13631 3/31/17

NO.	DATE	REVISION	CHK	APVD	BY	APVD
DSGN	B. TRAUTEIN	DR	J BRADLE	CHK	R SEIBERS	APVD	B TRAUTEIN

©CH2M HILL 2014. ALL RIGHTS RESERVED.

Clermont County

VILLAGE OF NEWTONSVILLE
WASTEWATER TREATMENT PLANT & COLLECTION SYSTEM - PART A
CLERMOUNT COUNTY WATER RESOURCES DEPARTMENT, CLERMONT COUNTY, OHIO

ch2m

ARCHITECTURAL/STRUCTURAL

LIFE SAFETY PLAN, BUILDING CODE DATA AND LEGENDS

REUSE OF DOCUMENTS: THIS DOCUMENT, AND THE IDEAS AND DESIGNS INCORPORATED HEREIN, AS AN INSTRUMENT OF PROFESSIONAL SERVICE, IS THE PROPERTY OF CH2M HILL AND IS NOT TO BE USED, IN WHOLE OR IN PART, FOR ANY OTHER PROJECT WITHOUT THE WRITTEN AUTHORIZATION OF CH2M HILL.

3/16" = 1'-0"
VERIFY SCALE
BAR IS ONE INCH ON ORIGINAL DRAWING
0 1"

DATE	2017-03-31
PROJ	665163
DWG	AS-001
SHEET	14 of 91

BID READY

GENERAL SHEET NOTES:

1. REFER TO SHEETS S-001 AND S-002 FOR STRUCTURAL GENERAL NOTES AND S-008 THRU S-016 FOR TYPICAL DETAILS.
2. COORDINATE BELOW SLAB PIPING WITH CIVIL AND PROCESS MECHANICAL PIPING PLANS.
3. REFER TO CIVIL DRAWINGS FOR PERIMETER PAVEMENT AND GRADING NOT SHOWN.
4. COORDINATE SIZE AND LOCATION OF WALL CAPS WITH AC-1 AND LAVATORY EXHAUST FAN. REFER TO DRAWING D-008.

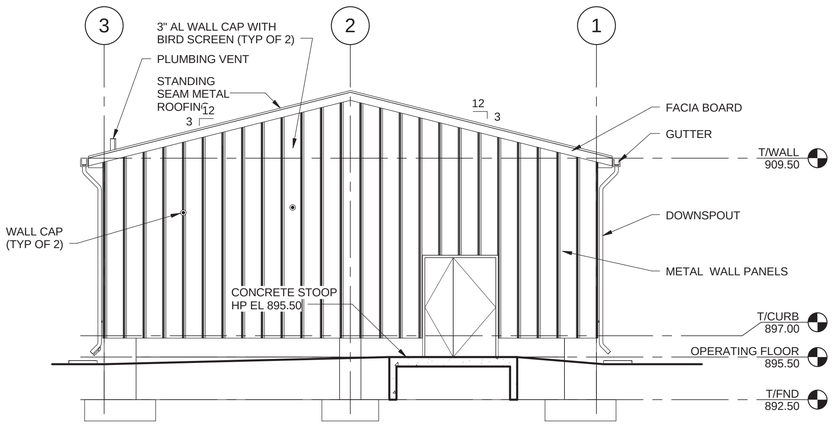

B1 NORTHEAST ELEVATION
3/16" = 1'-0"
AS-004

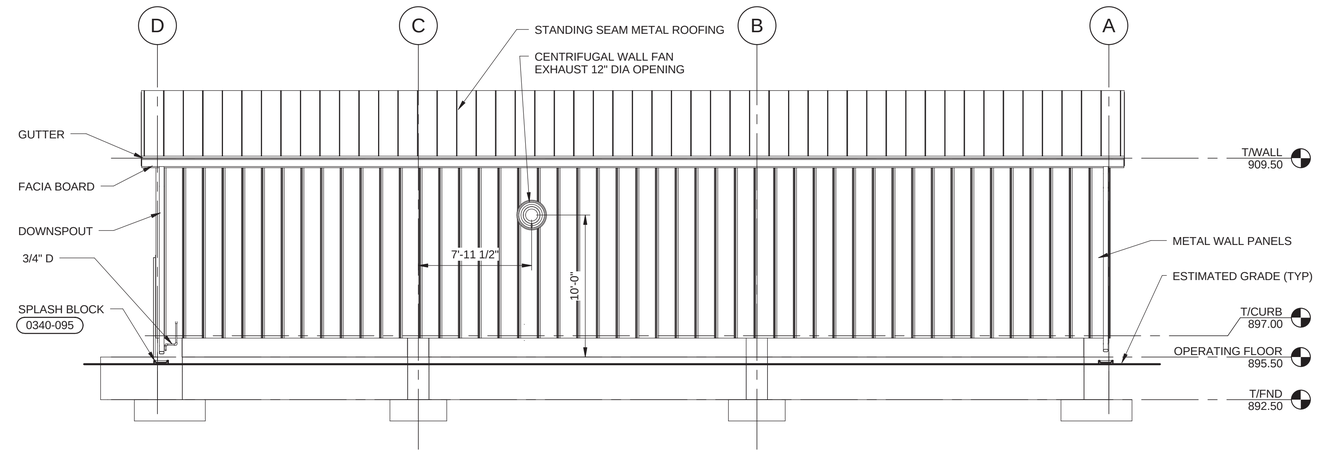

B4 NORTHWEST ELEVATION
3/16" = 1'-0"
AS-004

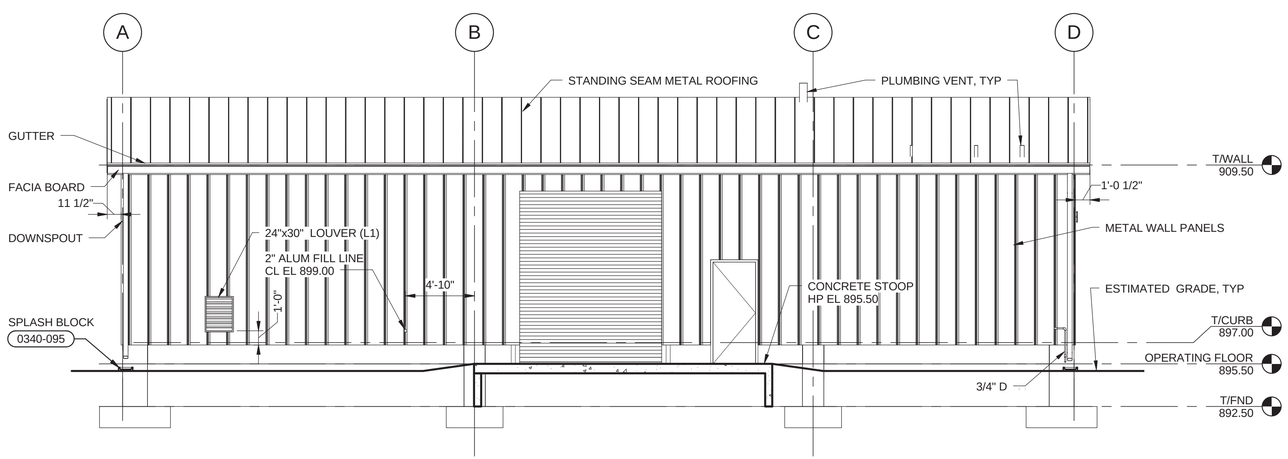

D1 SOUTHEAST ELEVATION
3/16" = 1'-0"
AS-004

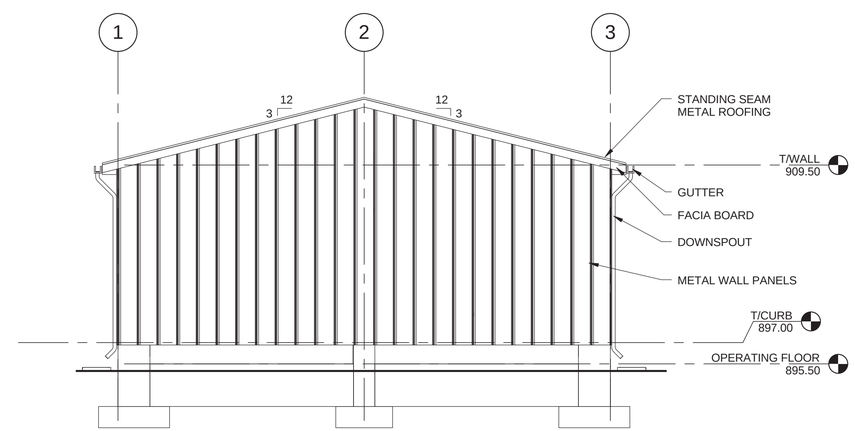

D5 SOUTHWEST ELEVATION
3/16" = 1'-0"
AS-004

STATE OF OHIO
BETH TRAUTWEIN
12-0831
3/31/17
REGISTERED ARCHITECT

NO.	DATE	REVISION	BY	APVD

DSGN B. TRAUTEIN | DR J. BRADLEY | CHK R. SEIBERS | APVD B TRAUTIEN

©CH2M HILL 2014. ALL RIGHTS RESERVED.

Clermont County

VILLAGE OF NEWTONSVILLE
WASTEWATER TREATMENT PLANT & COLLECTION SYSTEM - PART A
CLERMONT COUNTY WATER RESOURCES DEPARTMENT, CLERMONT COUNTY, OHIO

REUSE OF DOCUMENTS: THIS DOCUMENT, AND THE IDEAS AND DESIGNS INCORPORATED HEREIN, AS AN INSTRUMENT OF PROFESSIONAL SERVICE, IS THE PROPERTY OF CH2M HILL AND IS NOT TO BE USED, IN WHOLE OR IN PART, FOR ANY OTHER PROJECT WITHOUT THE WRITTEN AUTHORIZATION OF CH2M HILL.

ch2m

STRUCTURAL

TERTIARY FILTRATION & DISINECTION BUILDING ELEVATIONS

3/16" = 1'-0"
VERIFY SCALE
BAR IS ONE INCH ON ORIGINAL DRAWING
0 1"

DATE	2017-03-31
PROJ	665163
DWG	AS-002
SHEET	15 of 91

BID READY

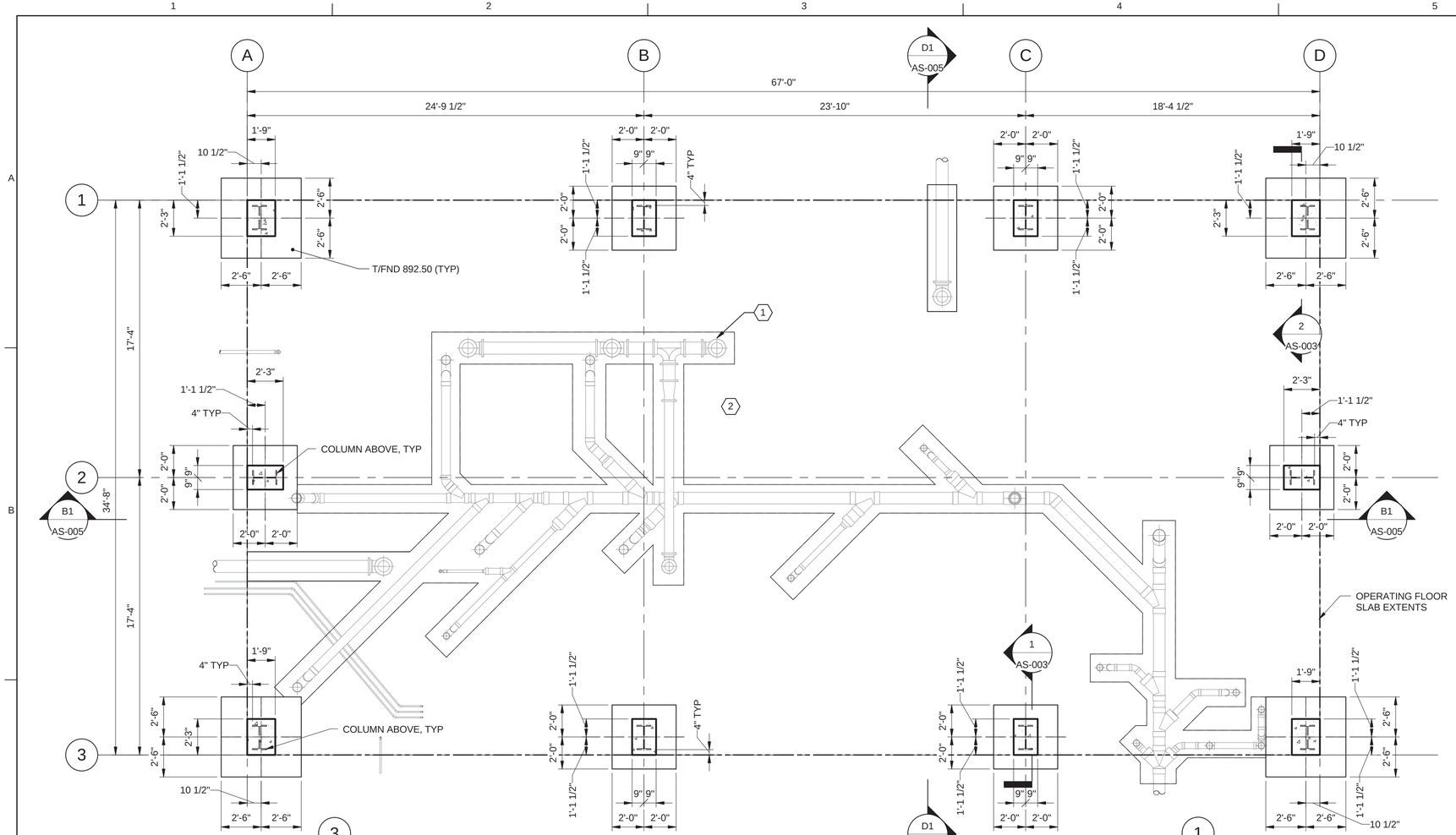

T/FOUNDATION

1/4" = 1'-0"

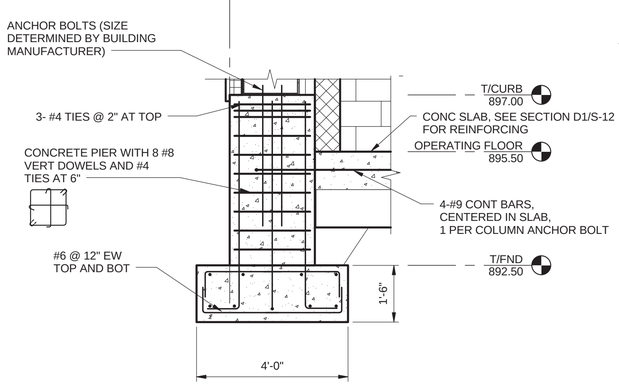

1 SECTION
1/2" = 1'-0"
AS-003

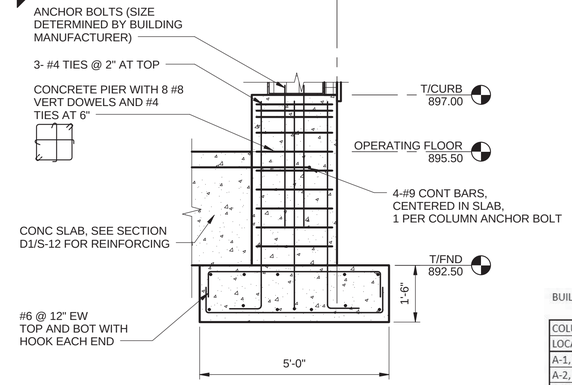

2 SECTION
1/2" = 1'-0"
AS-003

BUILDING FOUNDATION LOAD SCHEDULE

COLUMN	VERTICAL LOAD (KIPS)					LATERAL LOADS (KIPS)			
LOCATION	DL	LLr	SL	E	W	E (E-W)	E (N-S)	W (E-W)	W (N-S)
A-1, D1	2.0	5.0	5.0	+/- 1.0	- 4.0,+1.5	+/-1.5	+/-1.5	+/-2.0	+/-3.2
A-2, D2	3.0	7.8	8.0	+/-1.0	-7.5/+1.5	+/-1.0	+/-1.0	+/-3.0	+/-2.0
A-3, D-3	2.0	5.0	5.0	+/- 1.0	-10/+10	+/-1.5	+/-1.5	+/-2.0	+/-3.2
B-1, B-3	8.5	13.0	13.0	+/- 1.0	-10/+10	+/-1.5	+/-1.5	+/-2.5	+/-4.0
C--1, C-3	7.0	11.0	11.0	+/- 1.0	-9.5/+9.5	+/-1.5	+/-1.5	+/-2.5	+/-3.5

NOTES:
ALL LOADS ARE SERVICE LEVEL UNFACTORED LOADS
(-) VERTICAL LOAD IS A TENSILE LOAD
E-W REPRESENTS LOADING PARALLEL TO GRIDLINES IDENTIFIED WITH NUMBERS
N-S REPRESENTS LOADING PARRALEL TO GRIDLINES IDENTIFIED WITH LETTERS

GENERAL SHEET NOTES:

1. REFER TO SHEETS S-001 AND S-002 FOR STRUCTURAL GENERAL NOTES AND S-008 THRU S-016 FOR TYPICAL DETAILS.
2. COORDINATE BELOW SLAB PIPING WITH CIVIL AND PROCESS MECHANICAL PIPING PLANS.

SHEET KEYNOTES:

1 PROVIDE CONCRETE ENCASEMENT AROUND BELOW SLAB PIPING. REFER TO STANDARD DETAILS 0330-016 AND 0330-018.

2 PROVIDE CONTINUOUS VAPOR BARRIER OVER 12" OF COMPACTED GRANULAR FILL BELOW ENTIRE FLOOR SLAB.

STATE OF OHIO
ARNOL GILLUM
E-65157
2-31-17
REGISTERED PROFESSIONAL ENGINEER

NO.	DATE	REVISION	BY	APVD

DSGN	B. TRAUTEIN/ AJ GILLUM	DR	J. BRADLEY	CHK	R SIEBERS/ D LANGE	APVD	AJ GILLUM

©CH2M HILL 2014. ALL RIGHTS RESERVED.

Clermont County

VILLAGE OF NEWTONSVILLE
WASTEWATER TREATMENT PLANT & COLLECTION SYSTEM - PART A
CLERMONT COUNTY WATER RESOURCES DEPARTMENT, CLERMONT COUNTY, OHIO

ch2m

STRUCTURAL

TERTIARY FILTRATION & DISINFECTION BUILDING FOUNDATION PLAN

REUSE OF DOCUMENTS: THIS DOCUMENT, AND THE IDEAS AND DESIGNS INCORPORATED HEREIN, AS AN INSTRUMENT OF PROFESSIONAL SERVICE, IS THE PROPERTY OF CH2M HILL AND IS NOT TO BE USED, IN WHOLE OR IN PART, FOR ANY OTHER PROJECT WITHOUT THE WRITTEN AUTHORIZATION OF CH2M HILL.

As indicated
VERIFY SCALE
BAR IS ONE INCH ON ORIGINAL DRAWING
0 1"

DATE	2017-03-31
PROJ	665163
DWG	AS-003
SHEET	16 of 91

BID READY

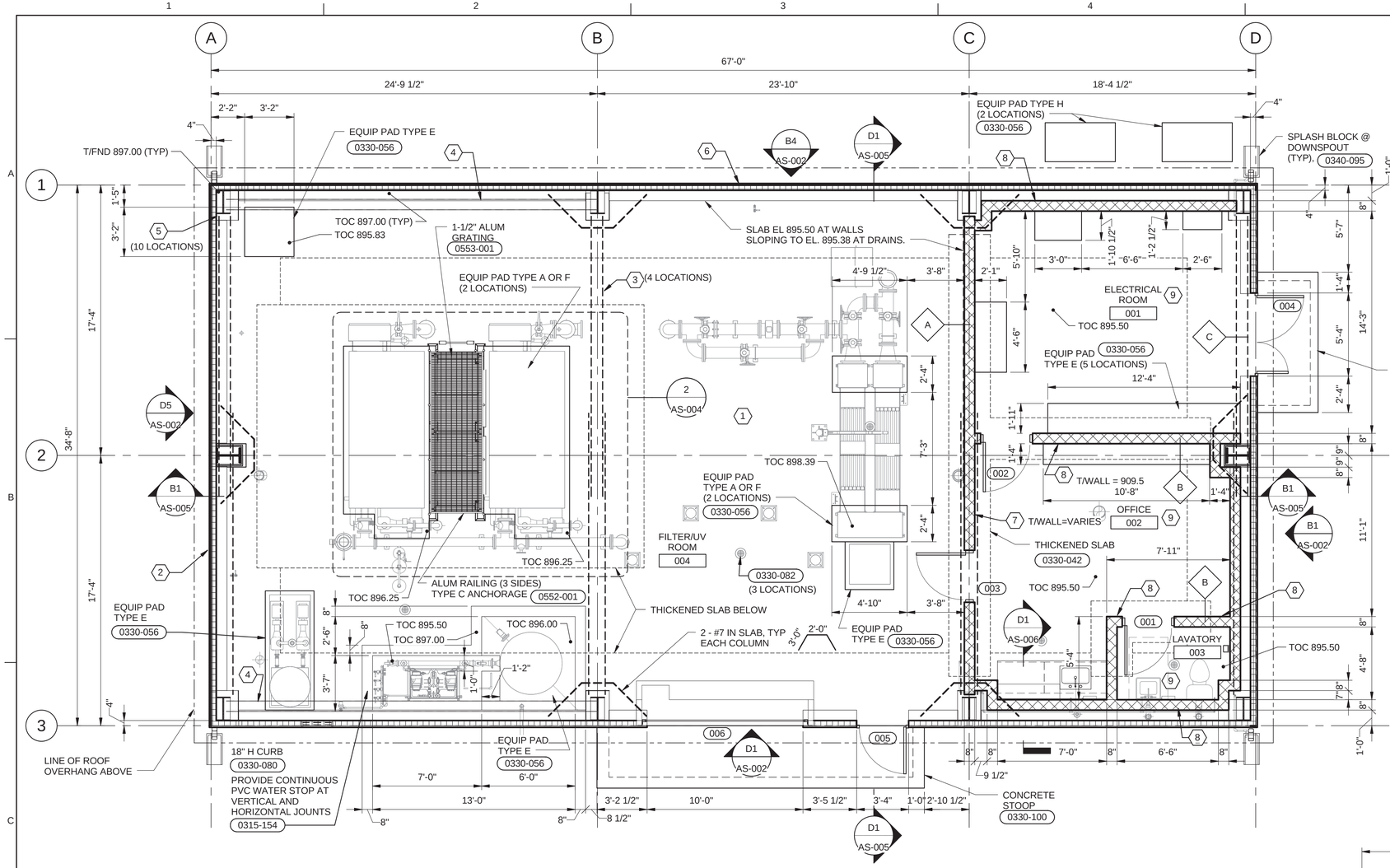

OPERATING FLOOR

1/4" = 1'-0"

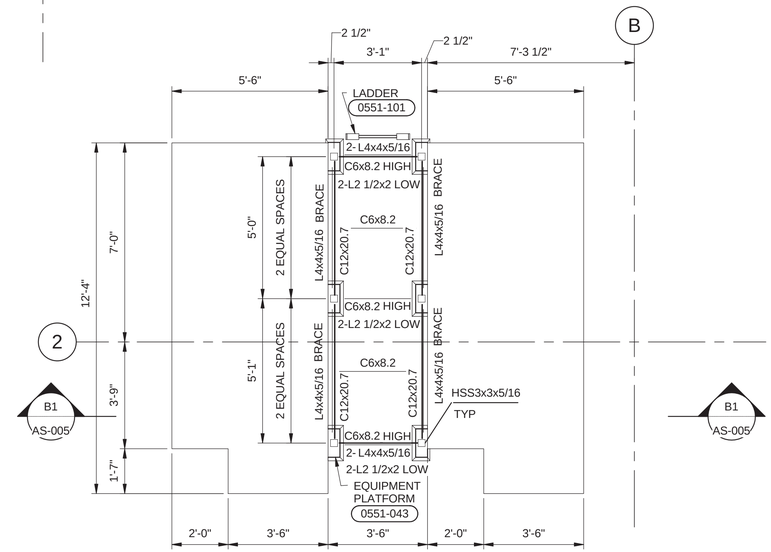

PLATFORM FRAMING PLAN

3/8" = 1'-0"

AS-004

GENERAL SHEET NOTES:

1. REFER TO SHEETS S-001 AND S-002 FOR STRUCTURAL GENERAL NOTES AND S-008 THRU S-016 FOR TYPICAL DETAILS.
2. COORDINATE BELOW SLAB PIPING WITH CIVIL AND PROCESS MECHANICAL PIPING PLANS.
3. REFER TO CIVIL DRAWINGS FOR PERIMETER PAVEMENT AND GRADING NOT SHOWN.
5. UNDER SLAB VAPOR RETARDER UNDER ENTIRE BUILDING.
6. FOR FIRE EXTINGUISHERS, SEE DRAWING AS-001.
7. FOR REQUIRED ROOF PENETRATIONS, SEE DETAIL B5/AS-007.

SHEET KEYNOTES:

1 12" THICK REINFORCED CONCRETE SLAB ON GRADE.
2 PERMITER CONCRETE BUILDING CURB.
3 CONTINUOUS #9 BARS BETWEEN COLUMN ANCHOR BOLTS. SPLICE AT MIDSPAN PER GENERAL NOTES TYPICAL. GRID A THRU D.
4 BUILDING CROSS BRACING LOCATION.
5 COLUMN AND PORTAL FRAME.
6 4" INSULATED EXTERIOR METAL SANDWINCH PANELS.
7 8" CMU WALL, FULL HEIGHT, REINFORCE WITH #5@24" OC IN GROUTED CELLS, PROVIDE MATCHING DOWELS INTO SLAB.
8 8" CMU WALL, REINFORCE WITH #5@32" OC IN GROUTED CELLS, PROVIDE MATCHING DOWELS INTO SLAB.
9 SPACE TO HAVE SUSPENDED GYPSUM BOARD, PAINTED CEILING AT 10'-0" ABOVE FINISHED FLOOR. LOCATE ACCESS PANEL PER ENGINEER IN SPACES 001 AND 002. ACCESS PANEL TO BE 24"X36" PRIME COATED STEEL CONCEALED FLANGE DRYWALL ACCESS DOOR BY ACCESS DOOR DIRECT OR APPROVED EQUAL.

WALL TYPES:

A CMU WITH MASONRY FILL INSULATION, SEE DETAIL D2/AS-008.

B CMU TO HEIGHT 14'-0".

C PEMB METAL WALL LINER TO EAVE PORTION OF EXTERIOR WALL WHERE THERE IS NOT CMU - ATTACH TO INSIDE FACE OF GIRTS - SOLID SURFACE BETWEEN CMU WALLS.

STATE OF OHIO
ARNOL GILLUM
E-65157
REGISTERED PROFESSIONAL ENGINEER
2-31-17

NO.	DATE	REVISION	BY	APVD
DSGN	B. TRAUTWEIN/ AJ GILLUM	DR J BRADLEY	CHK R SEIBERS/ D LANGE	APVD AJ GILLUM

©CH2M HILL 2014. ALL RIGHTS RESERVED.

REUSE OF DOCUMENTS: THIS DOCUMENT, AND THE IDEAS AND DESIGNS INCORPORATED HEREIN, AS AN INSTRUMENT OF PROFESSIONAL SERVICE, IS THE PROPERTY OF CH2M HILL AND IS NOT TO BE USED, IN WHOLE OR IN PART, FOR ANY OTHER PROJECT WITHOUT THE WRITTEN AUTHORIZATION OF CH2M HILL.

Clermont County

VILLAGE OF NEWTONSVILLE
WASTEWATER TREATMENT PLANT & COLLECTION SYSTEM - PART A
CLERMONT COUNTY WATER RESOURCES DEPARTMENT, CLERMONT COUNTY, OHIO

ch2m

STRUCTURAL

TERTIARY FILTRATION & DISINFECTION BUILDING OPERATING PLANS

As indicated

VERIFY SCALE

BAR IS ONE INCH ON ORIGINAL DRAWING
0 1"

DATE	2017-03-31
PROJ	665163
DWG	AS-004
SHEET	17 of 91

BID READY

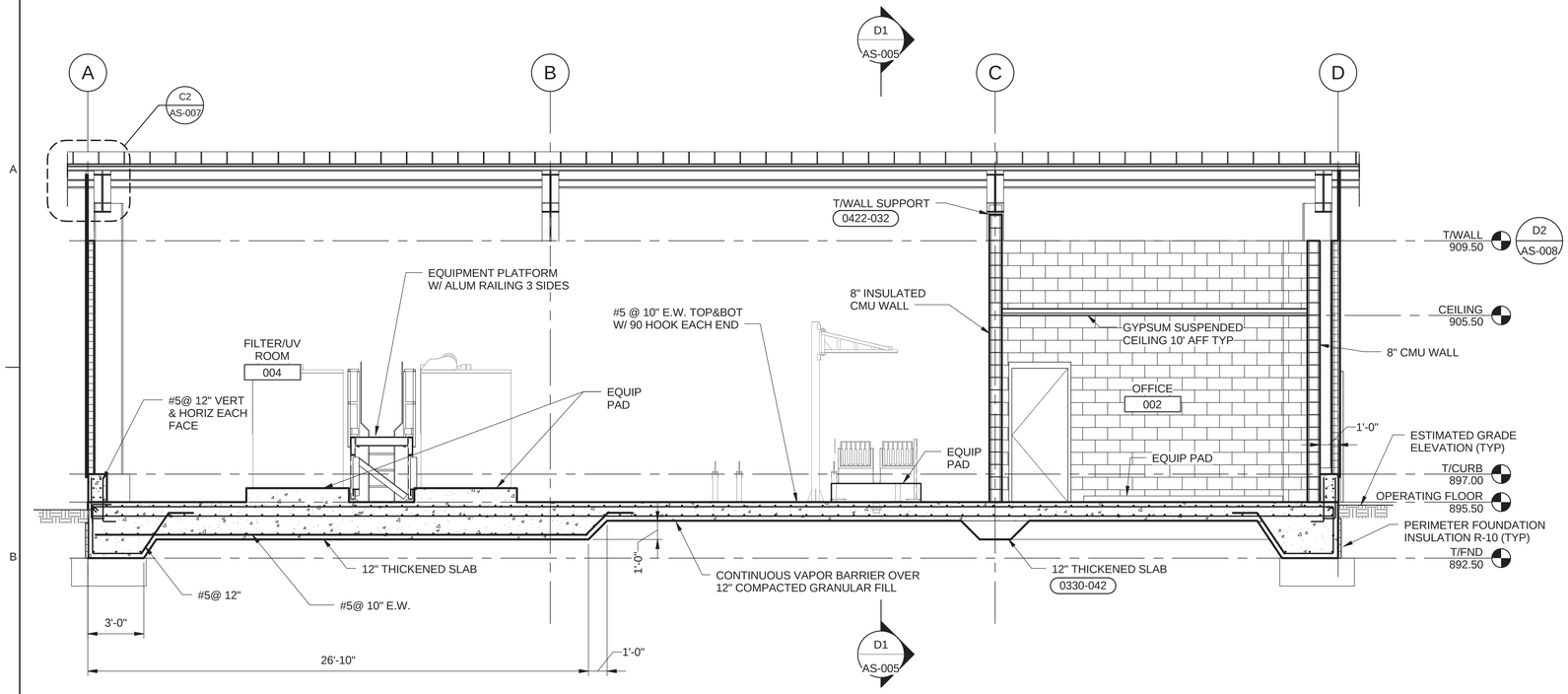

B1 SECTION
1/4" = 1'-0"
AS-003

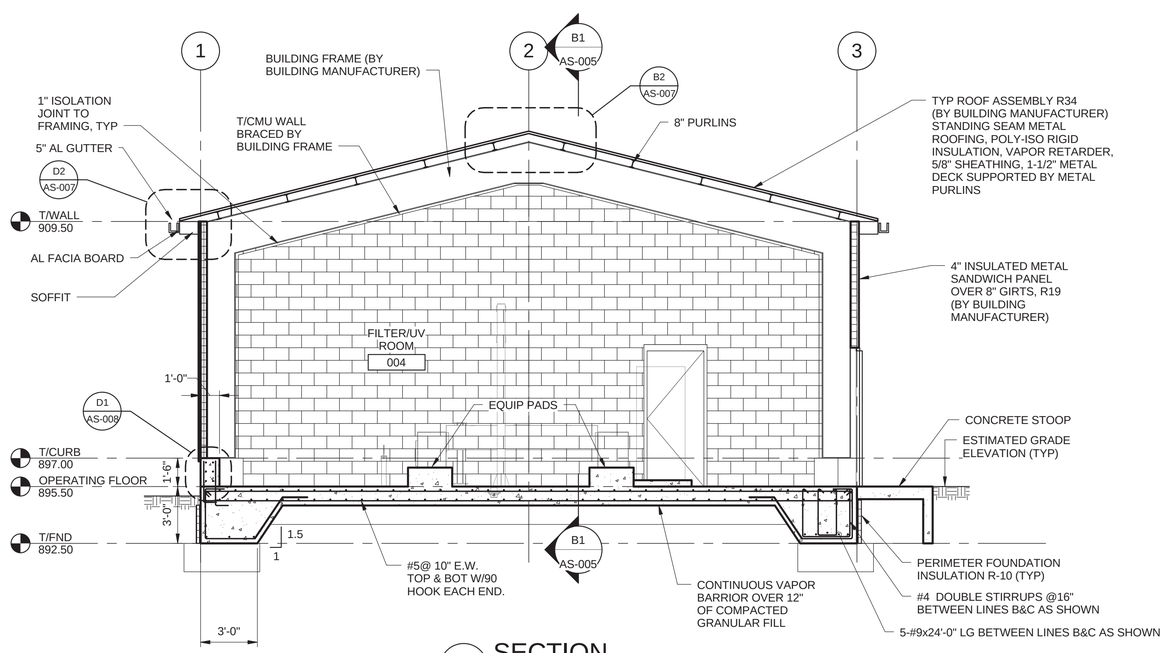

D1 SECTION
1/4" = 1'-0"
AS-003

GENERAL SHEET NOTES:

1. REFER TO SHEETS S-001 AND S-002 FOR STRUCTURAL GENERAL NOTES AND S-008 THRU S-016 FOR TYPICAL DETAILS.
2. COORDINATE BELOW SLAB PIPING WITH CIVIL AND PROCESS MECHANICAL PIPING PLANS.
3. REFER TO CIVIL DRAWINGS FOR PERIMETER PAVEMENT AND GRADING NOT SHOWN.
4. FOR VENT PIPE DETAIL THRU ROOF PANEL SEE DETAIL B5/AS-007.

STATE OF OHIO
ARNOL GILLUM
E-65157
REGISTERED
PROFESSIONAL ENGINEER
2-31-17

NO.	DATE	DR	REVISION	CHK	APVD
DSGN	B. TRAUTWEIN/ AJ GILLUM	J. BRADLEY		R. SEIBERS/ D. LANGE	AJ GILLUM

©CH2M HILL 2014. ALL RIGHTS RESERVED.

REUSE OF DOCUMENTS: THIS DOCUMENT, AND THE IDEAS AND DESIGNS INCORPORATED HEREIN, AS AN INSTRUMENT OF PROFESSIONAL SERVICE, IS THE PROPERTY OF CH2M HILL AND IS NOT TO BE USED, IN WHOLE OR IN PART, FOR ANY OTHER PROJECT WITHOUT THE WRITTEN AUTHORIZATION OF CH2M HILL.

Clermont County

VILLAGE OF NEWTONSVILLE
WASTEWATER TREATMENT PLANT & COLLECTION SYSTEM - PART A
CLERMONT COUNTY WATER RESOURCES DEPARTMENT, CLERMONT COUNTY, OHIO

ch2m

STRUCTURAL

TERTIARY FILTRATION & DISINFECTION BUILDING SECTIONS

1/4" = 1'-0"

VERIFY SCALE

BAR IS ONE INCH ON ORIGINAL DRAWING
0 1"

DATE	2017-03-31
PROJ	665163
DWG	AS-005
SHEET	18 of 91

BID READY

HARDWARE SETS:

GROUP 1

H1 HINGE
T1 THRESHOLD
L8 LOCKSET
C1 CLOSER
S3 STOP (WALL)

GROUP 2

H1 HINGE
T1 THRESHOLD
L5 LOCKSET
C4 CLOSER
K1 KICKPLATE

GROUP 3

H4 HINGE
T4 THRESHOLD
L1 LOCKSET ON ACTIVE LEAF
DUMMY SET ON INACTIVE LEAF
C4 CLOSER
B2 TOP & BOTTOM FLUSH BOLTS
W1 WEATHER STOPPING

GROUP 4

H4 HINGE
T4 THRESHOLD
L1 LOCKSET
C4 CLOSER
W1 WEATHER STOPPING

GROUP 5

SEE SPECIFICATION 08 33 23
OVERHEAD COILING DOOR FOR
INFORMATION

ABBREVIATIONS:

F	FLUSH
FOT4	FACTORY
FRP	FIBERGLASS REINFORCED PLASTIC
HDNR	HARDNER
HM	HOLLOW METAL (STEEL)
N/A	NOT APPLICABLE
OHC	OVERHEAD COILING DOOR
PS	PAINT SYSTEM (SEE SPECIFICATION 09 90 00)
SG	LAMINATED SAFETY GLASS
STL	STEEL
TBS	TO BE SELECTED

DOOR FRAME TYPES

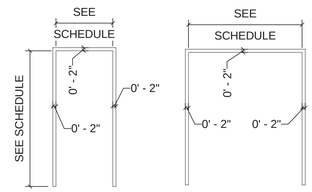

DOOR TYPES

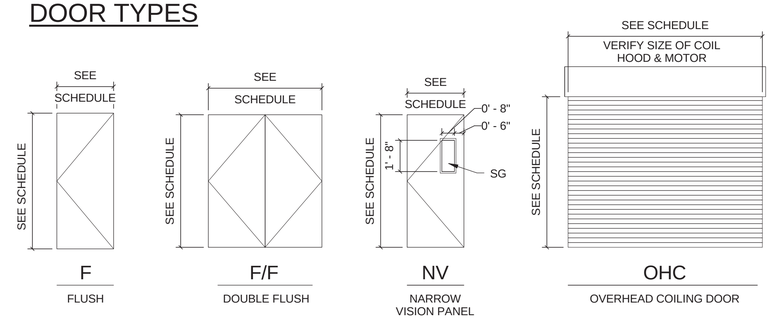

TERTIARY FILTRATION AND DISINFECTION BUILDING DOOR SCHEDULE

SPACE	NUMBER	DOOR OPENING WIDTH	DOOR OPENING HEIGHT	DOOR TYPE	DOOR MATERIAL	DOOR GLASS TYPE	DOOR FINISH	DOOR COLOR	FRAME TYPE	FRAME MATERIAL	FRAME FINISH	FRAME COLOR	DETAIL HEAD DETAIL	DETAIL JAMB DETAIL	DETAIL SILL DETAIL	FIRE RATING	HARDWARE	MISC
LAVATORY	001	3' - 0"	7' - 0"	F	FRP	NA	FCTY	TBS	D	FRP	FCTY	TBS	B1/AS-008	B1/AS-008	B1/AS-008	NR	1	
ELECTRICAL ROOM	002	3' - 0"	7' - 2"	NV	FRP	SG	FCTY	TBS	D	FRP	FCTY	TBS	B1/AS-008	B1/AS-008	B1/AS-008	NOT RATED	2	
OFFICE	003	3' - 0"	7' - 2"	NV	FRP	SG	FCTY	TBS	D	FRP	FCTY	TBS	B1/AS-008	B1/AS-008	B1/AS-008	NOT RATED	2	
ELECTRICAL ROOM	004	5' - 0"	7' - 0"	FF	HM	NA	PS5	TBS	DD	HM	PS5	TBS	B2/AS-008	B2/AS-008	B2/AS-008	NOT RATED	3	
FILTER/UV ROOM	005	3' - 0"	7' - 2"	F	HM	-	PS5	TBS	D	HM	PS5	TBS	B2/AS-008	B2/AS-008	B2/AS-008	NOT RATED	4	
FILTER/UV ROOM	006	10' - 0"	14' - 0"	OHC	STL		FCTY	TBS	N/A	-	FCTY	TBS	B1/AS-007	D1/AS-007	D1/AS-007	NOT RATED	5	

ROOM FINISH SCHEDULE

BUILDING	NUMBER	NAME	AREA	FLOORING FLOOR MATERIAL	FLOORING FLOOR FINISH	FLOORING BASE	PARTITIONS NORTH PARTITIONS MATERIAL	PARTITIONS NORTH PARTITIONS FINISH	PARTITIONS EAST PARTITIONS MATERIAL	PARTITIONS EAST PARTITIONS FINISH	PARTITIONS SOUTH PARTITIONS MATERIAL	PARTITIONS SOUTH PARTITIONS FINISH	PARTITIONS WEST PARTITIONS MATERIAL	PARTITIONS WEST PARTITIONS FINISH	CEILING MATERIAL	CEILING FINISH	COMMENTS
FILTRATION	001	ELECTRICAL ROOM	250.67 SF	CONCRETE	HDNR	-	CMU	PS109/113	STL	FCTY	CMU	PS109/113	CMU	PS109/113	GYB BD	PS115	
FILTRATION	002	OFFICE	221.97 SF	CONCRETE	HDNR	-	CMU	PS109/113	CMU	PS109/113	CMU	PS109/113	CMU	PS109/113	GYB BD	PS115	
FILTRATION	003	LAVATORY	32.90 SF	CONCRETE	HDNR	-	CMU	PS109/113	CMU	PS109/113	CMU	PS109/113	CMU	PS109/113	GYB BD	PS115	
FILTRATION	004	FILTER/UV ROOM	1657.95 SF	CONCRETE	HDNR	-	STL	FCTY	CMU	PS109/113	STL	FCTY	CMU	PS109/113	EXPOSED	-	

GENERAL SHEET NOTES:

1. FOR HARDWARE INFORMATION SEE SPECIFICATION SECTION 08 77 00 DOOR HARDWARE.
2. "PS" REFERS TO PAINT SYSTEM. SEE SPECIFICATION 09 90 00.

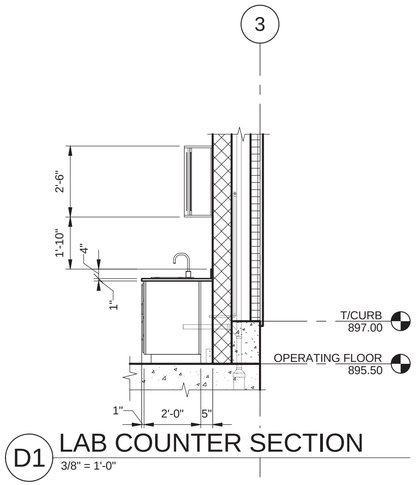

D1 LAB COUNTER SECTION
3/8" = 1'-0"

AS-004

STATE OF OHIO
BETH TRAUTWEIN
12763631
REGISTERED ARCHITECT
3/31/17

NO.	DATE	DSGN	DR	REVISION	CHK	APVD	BY	APVD
		B. TRAUTWEIN	J. BRADLEY		R SEIBERS		B TRAUTWEIN	

©CH2M HILL 2014. ALL RIGHTS RESERVED.

REUSE OF DOCUMENTS: THIS DOCUMENT, AND THE IDEAS AND DESIGNS INCORPORATED HEREIN, AS AN INSTRUMENT OF PROFESSIONAL SERVICE, IS THE PROPERTY OF CH2M HILL AND IS NOT TO BE USED, IN WHOLE OR IN PART, FOR ANY OTHER PROJECT WITHOUT THE WRITTEN AUTHORIZATION OF CH2M HILL.

Clermont County

VILLAGE OF NEWTONSVILLE
WASTEWATER TREATMENT PLANT &
COLLECTION SYSTEM - PART A
CLERMONT COUNTY WATER RESOURCES
DEPARTMENT, CLERMONT COUNTY, OHIO

ch2m

STRUCTURAL
TERTIARY FILTRATION & DISINFECTION
BUILDING SECTIONS AND
SCHECULES

As indicated
VERIFY SCALE
BAR IS ONE INCH ON ORIGINAL DRAWING
0 1"

DATE	2017-03-31
PROJ	665163
DWG	AS-006
SHEET	19 of 91

BID READY

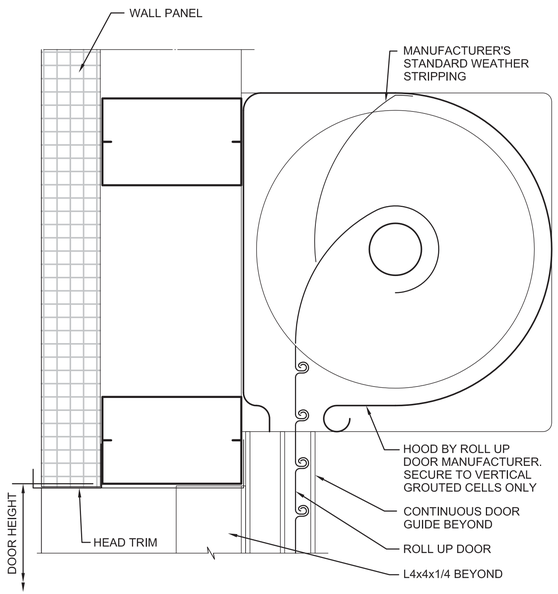

B1 OVERHEAD COILING DOOR HEAD
NTS

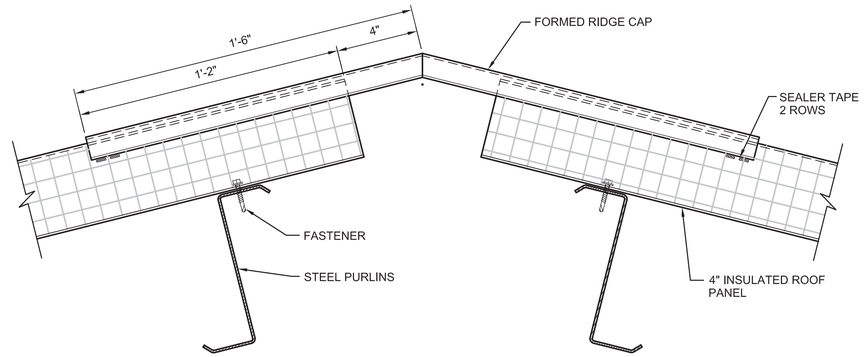

B2 RIDGE DETAIL
3"=1'-0"

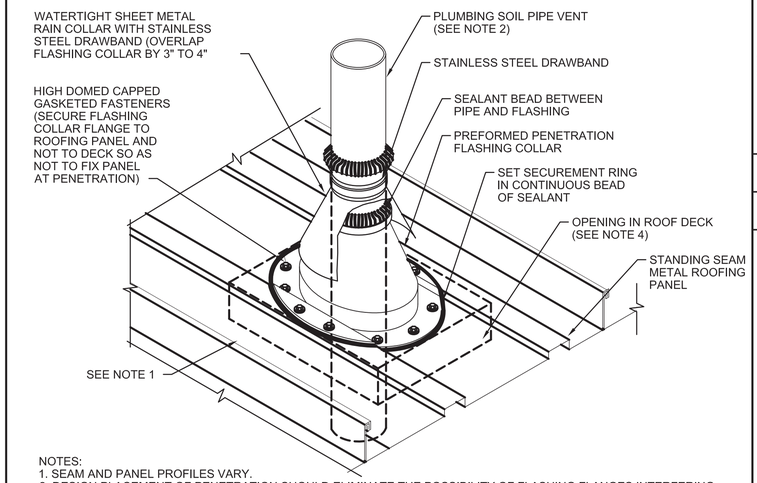

NOTES:
1. SEAM AND PANEL PROFILES VARY.
2. DESIGN PLACEMENT OF PENETRATION SHOULD ELIMINATE THE POSSIBILITY OF FLASHING FLANGES INTERFERING WITH PANEL SEAMS.
3. IF FIELD PANELS OVERLAP AT THE PENETRATION, ATTACHMENT OF THE DOWNSLOPE PANEL, ALONG ITS UPSLOPE END, MAY BE NECESSARY.
4. CUT OVERSIZE HOLE IN ROOF DECK TO ALLOW FOR THERMAL MOVEMENT.
5. VENT STACKS AND OTHER PIPES SHOULD HAVE A MINIMUM OF 12 INCHES OF CLEARANCE ON ALL SIDES FROM WALLS, CURBS, AND OTHER PROJECTIONS TO FACILITATE PROPER FLASHING.

B5 PIPE THROUGH ROOF
3"=1'-0"

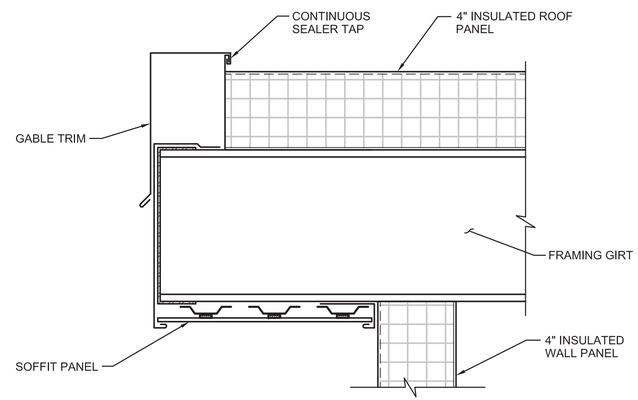

NOTE:
SUPPLY FASTENERS AS REQUIRED

C2 GABLE DETAIL
3"=1'-0"

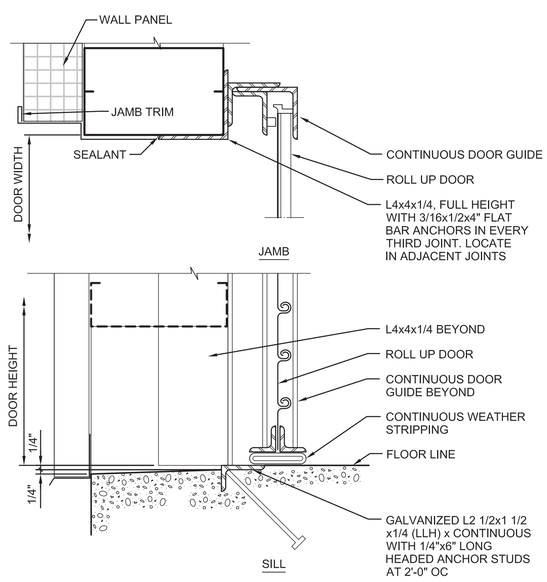

D1 JAMB/SILL
NTS

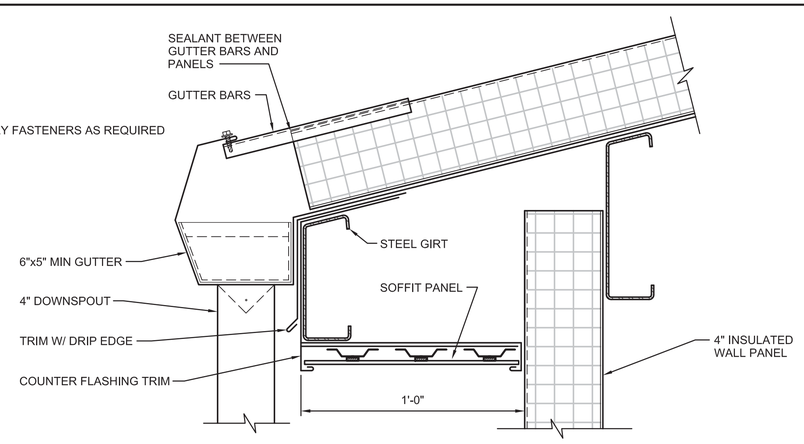

NOTE:
SUPPLY FASTENERS AS REQUIRED

D2 EAVE AND GUTTER DETAIL
3"=1'-0"

STATE OF OHIO
BETH TRAUTWEIN
12-0831
REGISTERED ARCHITECT
3/31/17

NO.	DATE	REVISION	BY	APVD

DSGN B. TRAUTWEIN | DR J. BRADLEY | CHK R SEIBERS | APVD B. TRAUTWEIN

©CH2M HILL 2015. ALL RIGHTS RESERVED.

VILLAGE OF NEWTONSVILLE
WASTEWATER TREATMENT PLANT & COLLECTION SYSTEM - PART A
CLERMONT COUNTY WATER RESOURCES DEPARTMENT, CLERMONT COUNTY, OHIO

ARCHITECTURAL/STRUCTURAL

TYPICAL DETAILS 1

REUSE OF DOCUMENTS: THIS DOCUMENT, AND THE IDEAS AND DESIGNS INCORPORATED HEREIN, AS AN INSTRUMENT OF PROFESSIONAL SERVICE, IS THE PROPERTY OF CH2M HILL AND IS NOT TO BE USED, IN WHOLE OR IN PART, FOR ANY OTHER PROJECT WITHOUT THE WRITTEN AUTHORIZATION OF CH2M HILL.

AS INDICATED
VERIFY SCALE
BAR IS ONE INCH ON ORIGINAL DRAWING.
0 1"

DATE	2017-03-31
PROJ	665163
DWG	AS-007
SHEET	20 of 91

BID READY

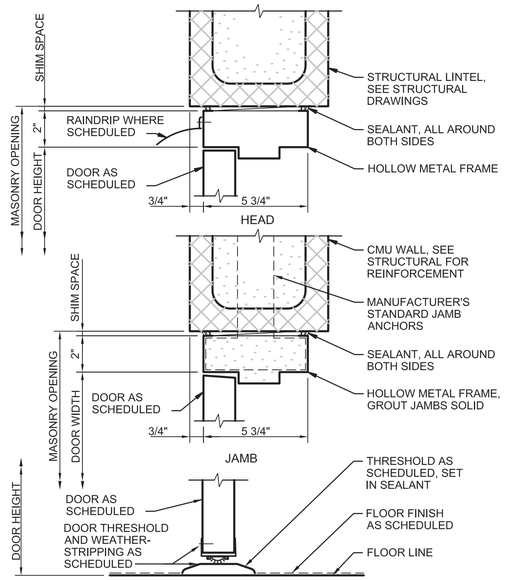

NOTE:
FRP DOORS AND FRAMES SIMILAR.

B1 DOOR DETAILS
3'=1'-0"

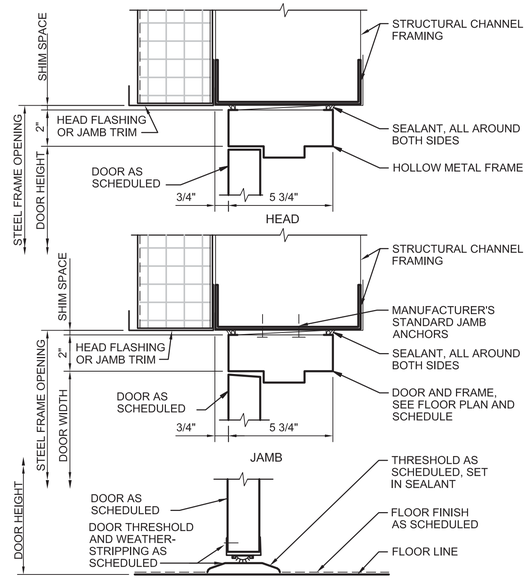

B2 DOOR DETAILS
3'=1'-0"

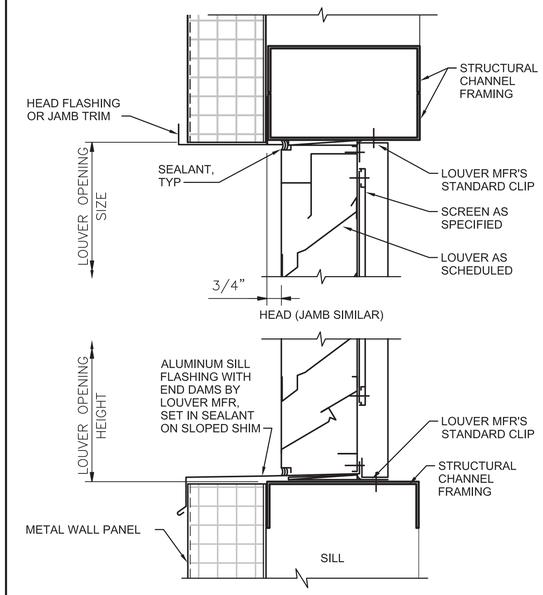

B4 LOUVER DETAILS
3'=1'-0"

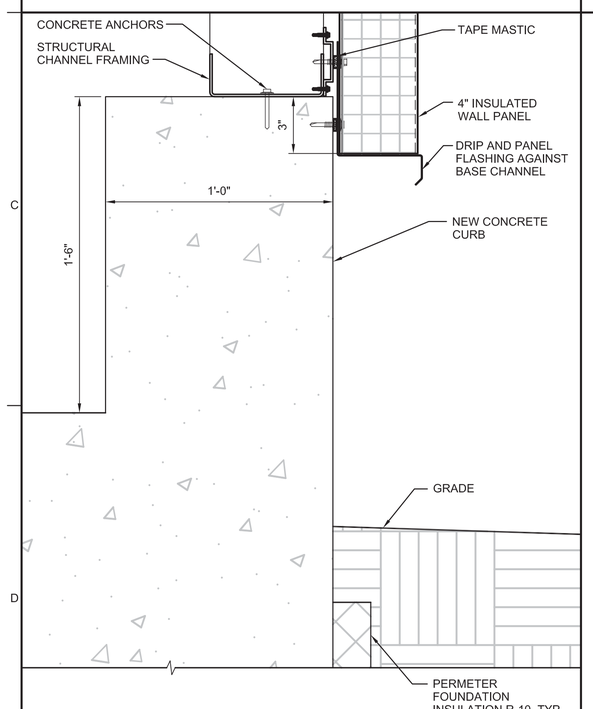

D1 TYPICAL WALL BASE DETAIL
NTS

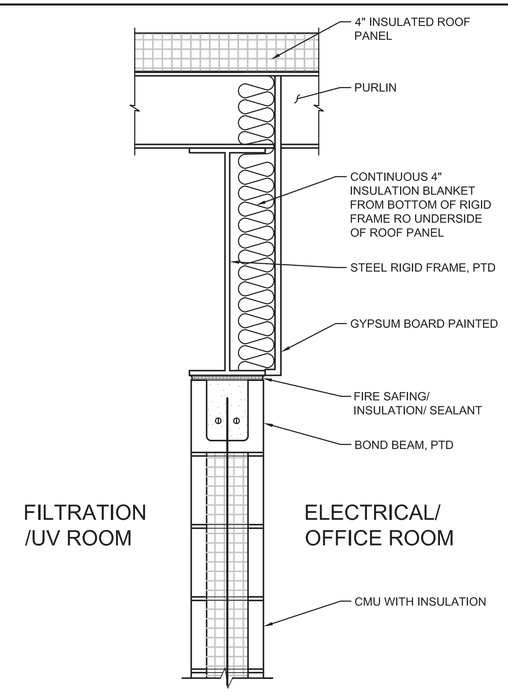

D2 NON-BEARING MASONRY WALL
NTS

STATE OF OHIO
BETH TRAUTWEIN
12/30/31
REGISTERED ARCHITECT
3/31/17

NO.	DATE	REVISION	BY	APVD

DSGN B. TRAUTWEIN | DR J. BRADLEY | CHK R SEIBERS | APVD B. TRAUTWEIN

VILLAGE OF NEWTONSVILLE
WASTEWATER TREATMENT PLANT & COLLECTION SYSTEM - PART A
CLERMONT COUNTY WATER RESOURCES DEPARTMENT, CLERMONT COUNTY, OHIO

ARCHITECTURAL/STRUCTURAL
TYPICAL DETAILS 2

AS INDICATED
VERIFY SCALE
BAR IS ONE INCH ON ORIGINAL DRAWING.
0 1"

DATE	2017-03-31
PROJ	665163
DWG	AS-008
SHEET	21 of 91

BID READY

REUSE OF DOCUMENTS: THIS DOCUMENT, AND THE IDEAS AND DESIGNS INCORPORATED HEREIN, AS AN INSTRUMENT OF PROFESSIONAL SERVICE IS THE PROPERTY OF CH2M HILL AND IS NOT TO BE USED, IN WHOLE OR IN PART, FOR ANY OTHER PROJECT WITHOUT THE WRITTEN AUTHORIZATION OF CH2M HILL.
©CH2M HILL 2015. ALL RIGHTS RESERVED.

DESIGN CRITERIA

1. APPLICABLE CODE: 2009 INTERNATIONAL BUILDING CODE (IBC), AS AMENDED BY THE STATE OF OHIO AND ALL OTHER APPLICABLE LOCAL AGENCIES.

2. REFER TO THE DRAWINGS FOR ADDITIONAL AND SPECIFIC STRUCTURE LOADINGS AND REQUIREMENTS.

3. ALL LOADS SHOWN ARE SERVICE LEVEL (UNFACTORED) UNLESS SPECIFICALLY NOTED OTHERWISE.

4. DEAD LOADS:
A. SELF WEIGHT OF ALL PERMANENT STRUCTURAL COMPONENTS, ATTACHMENTS AND EQUIPMENT.

5. ROOF LOADS:

GROUND SNOW LOAD, Pg	= 20 PSF
TERRAIN CATEGORY	= C
SNOW EXPOSURE FACTOR, Ce	= 1.0
THERMAL FACTOR, Ct	= 1.10
SLOPE FACTOR, Cs	= 1.0
IMPORTANCE FACTOR, I	= 1.10
MINIMUM FLAT ROOF SNOW LOAD, Pf	= 22 PSF
LIVE LOAD	= 20 PSF
MISCELLANEOUS MECHANICAL AND ELECTRICAL LOADS	= 5 PSF

DEFLECTION CRITERIA FOR CONTRACTOR DESIGNED ROOF FRAMING MEMBERS:

TOTAL LOAD	L/240
LIVE LOAD	L/360
SNOW LOAD	L/360

WHERE L IS THE MEMBER SPAN LENGTH]

6. FLOOR LIVE LOADS:

ELECTRICAL ROOM	300 PSF
MECHANICAL ROOM	200 PSF
CORRIDORS, EXITS, STAIRS	100 PSF
WALKWAYS AND ELEVATED PLATFORMS	100 PSF
OFFICE AND OTHER 1ST FLOOR AREA	70 PSF

DEFLECTION CRITERIA FOR CONTRACTOR DESIGNED FLOOR FRAMING MEMBERS:
INDUSTRIAL/PROCESS FLOOR (ELECTRICAL/ MECHANICAL ROOMS, STORAGE, ETC):
TOTAL LOAD L/240
LIVE LOAD L/360

7. WIND LOADS:

ASCE 7 METHOD	= 2 ALL HEIGHTS
BASIC WIND SPEED (3-SECOND GUST)	= 90 MPH
EXPOSURE CATEGORY	= C
INTERNAL PRESSURE COEFFICIENT, GCpi	=±0.55
OCCUPANCY CATEGORY	= III
IMPORTANCE FACTOR, Iw	= 1.15
COMPONENT AND CLADDING WALL ELEMENTS (WINDOWS, DOORS, LOUVERS, SIDING ETC FOR STRUCTURES UNDER 60 FEET IN HEIGHT)	= 30 PSF

8. SEISMIC LOADS:
MAPPED SPECTRAL RESPONSE ACCELERATIONS

S_S	= 0.144g
S_1	= 0.075g
DESIGN SPECTRAL RESPONSE ACCELERATIONS	
S_{DS}	= 0.153g
S_{D1}	= 0.120g
SITE CLASS	= D
OCCUPANCY CATEGORY	= III
SEISMIC DESIGN CATEGORY	= B
IMPORTANCE FACTOR, Ie	= 1.25

STRUCTURES HAVE BEEN ANALYZED USING THE EQUIVALENT LATERAL FORCE PROCEDURES OF ASCE 7.

9. LATERAL FORCE-RESISTING SYSTEMS
FACILITY DISINFECTION BUILDING:

ORDINARY STEEL MOMENT FRAME IN N-S DIRECTION	ORDINARY STEEL CONCENTRICALLY BRACE FRAME IN E-W DIRECTION
$V = C_SW$	$V = C_SW$
$C_S = 0.055$ R = 3.5	$C_S = 0.059$ R = 3.25

FACILITY SCREEN BATCH REACTOR AND POST-AERATION BASINS:
FLAT BOTTOM GROUND SUPPORTED TANK REINFORCED CONCRETE REINFORCED NON-SLIDING BASE
$V = C_SW$
$C_S = 0.096$ R = 2

10. SPECIAL LOADS: SEE PLANS FOR STRUCTURE SPECIFIC LOADS

11. HYDRAULIC LOADS: 63 PCF

12. SOIL DESIGN PARAMETERS:

A. NET ALLOWABLE SOIL BEARING PRESSURES:	6000 PSF
B. EQUIVALENT DRAINED FLUID PRESSURES:	
ACTIVE	35 PCF
AT REST:	65 PCF
C. EQUIVALENT UNDRAINED FLUID PRESSURES:	
ACTIVE	70 PCF
AT REST:	100 PCF
D. VERTICAL SURCHARGE:	2 FT OF SOIL WEIGHT
E. MODULUS OF SUBGRADE REACTION:	100 PCI
F. NATIVE SOIL UNIT WEIGHT:	120 PCF

13. FACTOR OF SAFETY FOR UPLIFT RESISTANCE (SOIL FRICTION AND WEDGE FAILURE RESISTANCE NOT CONSIDERED:

GW ELEVATION	EL. 886
100 YEAR FLOOD ELEVATION	BELOW BASIN AND BUILDING ELEVATION

14. FACTOR OF SAFETY FOR UPLIFT RESISTANCE (SOIL FRICTION AND WEDGE FAILURE RESISTANCE NOT CONSIDERED

GW ELEVATION	FOS=1.25
100 YEAR FLOOD ELEVATION	FOS=1.10

15. FROST DEPTH: 30 IN

GENERAL INFORMATION

1. REFER TO GENERAL SITE NOTES ON DRAWING C-001 FOR HORIZONTAL AND VERTICAL DATUM.

2. FOR ABBREVIATIONS NOT LISTED, SEE ASME Y14.38 "ABBREVIATIONS AND ACRONYMS: PUBLICATION AS DISTRIBUTED BY THE AMERICAN SOCIETY OF MECHANICAL ENGINEERS (ASME).

3. DESIGN DETAILS ARE INTENDED TO BE TYPICAL AND SHALL APPLY TO SIMILAR SITUATIONS OCCURRING THROUGHOUT THE PROJECT, WHETHER OR NOT THEY ARE INDIVIDUALLY CALLED OUT.

4. VERIFY FINAL OPENING DIMENSIONS IN WALLS, SLABS, AND DECKS WITH OTHER DISCIPLINE DRAWINGS PRIOR TO CONSTRUCTION OF THESE ELEMENTS.

5. FOR NUMBER, TYPE, SIZE, ARRANGEMENT, AND/OR LOCATION OF EQUIPMENT PADS, SEE OTHER DISCIPLINE DRAWINGS. COORDINATE WITH EQUIPMENT SUPPLIER PRIOR TO PLACING SLABS, WALLS AND FOUNDATIONS. COORDINATE PIPING OPENINGS WITH OTHER DISCIPLINE DRAWINGS.

6. DO NOT CUT OR MODIFY STRUCTURAL MEMBERS FOR PIPES, DUCTS, ETC, UNLESS SPECIFICALLY DETAILED OR APPROVED IN WRITING BY THE ENGINEER.

7. VISITS TO THE JOB SITE BY THE ENGINEER TO OBSERVE THE CONSTRUCTION DO NOT IN ANY WAY MEAN THAT ENGINEER IS GUARANTOR OF CONSTRUCTOR'S WORK, NOR RESPONSIBLE FOR THE COMPREHENSIVE OR SPECIAL INSPECTIONS, COORDINATION, SUPERVISION, OR SAFETY AT THE JOB SITE.

INSPECTION AND TESTING

1. SPECIAL INSPECTION DOES NOT INCLUDE OR WAIVE THE RESPONSIBILITY FOR INSPECTIONS REQUIRED BY THE BUILDING OFFICIAL. THE CONTRACTOR SHALL SCHEDULE BOTH INSPECTIONS.

2. SPECIFIED CONCRETE AND MASONRY AND OTHER MATERIAL TESTING RELATED TO SPECIAL INSPECTION DURING CONSTRUCTION WILL BE OWNER FURNISHED.

3. SPECIFIED LABORATORY TEST MIXES AND SIMILAR TEST RESULTS TO VERIFY MATERIAL QUALITY AND CONFORMANCE TO SPECIFICATIONS, AND SUBMITTED FOR REVIEW PRIOR TO ACCEPTANCE FOR USE ON THE PROJECT, SHALL BE THE RESPONSIBILITY OF THE CONTRACTOR.

4. SPECIAL INSPECTION, TESTING AND OBSERVATION (OWNER FURNISHED) IS REQUIRED IN ACCORDANCE WITH IBC SECTIONS 110 AND 1704 AS INDICATED IN THE STATEMENT OF SPECIAL INSPECTION.

GEOTECHNICAL OBSERVATION

1. SPECIAL INSPECTION (OWNER FURNISHED) IS REQUIRED IN ACCORDANCE WITH IBC SECTIONS 108 AND 1701 ON THE FOLLOWING PORTIONS OF THE WORK:
A. SOILS

FOUNDATIONS

1. EXCAVATIONS SHALL BE SHORED TO PREVENT SUBSIDENCE OR DAMAGE TO ADJACENT EXISTING STRUCTURES, ROADS, UTILITIES, ETC.

2. FOUNDATION SLABS, SLABS-ON-GRADE AND WALL AND COLUMN FOUNDATIONS SPECIFICALLY NOTED TO BE ON FILL SHALL BEAR ON COMPACTED GRANULAR FILL COORDINATE WITH VAPOR RETARDER REQUIREMENTS.

3. FOUNDATION BEARING SURFACES SHALL BE OBSERVED BY THE GEOTECHNICAL ENGINEER OR QUALIFIED DESIGNEE PRIOR TO PLACEMENT OF FORMWORK OR REINFORCING STEEL. THE OBSERVATION SHALL VERIFY IF THE ACTUAL EXPOSED SUBGRADE IS AS ANTICIPATED BY THE SITE SPECIFIC BORINGS AND DATA REPORTS.

4. NO BACKFILL SHALL BE PLACED BEHIND WALLS UNTIL THE WALLS HAVE ATTAINED 100 PERCENT AND TOP SUPPORTING SLAB'S CONCRETE HAS ATTAINED 80 PERCENT OF THEIR SPECIFIED 28 DAY COMPRESSIVE STRENGTH, OR UNTIL TOP-OF-WALL FRAMING SYSTEMS, INCLUDING STEEL OR WOOD DIAPHRAGMS, HAVE BEEN COMPLETED.

5. NO BACKFILL SHALL BE PLACED BEHIND CANTILEVERED, FREE TOP WALLS UNTIL THE CONCRETE HAS ATTAINED 100 PERCENT OF ITS SPECIFIED 28 DAY COMPRESSIVE STRENGTH.

FORMWORK, SHORING, AND BRACING

1. STRUCTURES SHOWN ON THE DRAWINGS HAVE BEEN DESIGNED FOR STABILITY UNDER FINAL CONDITIONS ONLY. DESIGN SHOWN DOES NOT INCLUDE NECESSARY COMPONENTS OR EQUIPMENT FOR STABILITY OF THE STRUCTURES DURING CONSTRUCTION. CONTRACTOR IS RESPONSIBLE FOR WORK RELATING TO CONSTRUCTION ERECTION METHODS, BRACING, SHORING, RIGGING, GUYS, SCAFFOLDING, FORMWORK, AND OTHER WORK AIDS REQUIRED TO SAFELY PERFORM THE WORK SHOWN.

2. TEMPORARY SHORING SHALL REMAIN IN PLACE UNTIL ELEVATED CONCRETE FLOOR OR SLABS HAVE REACHED 80 PERCENT OF THE 28 DAY COMPRESSIVE STRENGTH AS DETERMINED BY FIELD CYLINDER BREAKS.

3. "BURY"BARS OR "CARRIER"BARS ARE NOT ALLOWED FOR THE BOTTOM MATS OF REINFORCING IN ALL ELEVATED SLABS AND ARE NOT ALLOWED FOR THE TOP MATS OF REINFORCING IN ELEVATED SLABS LESS THAN 12 INCHES THICK.

CONCRETE REINFORCING

1. REINFORCING STEEL:
TYPICAL: ASTM A615, GRADE 60

2. FABRICATION AND PLACEMENT OF REINFORCING STEEL SHALL BE IN ACCORDANCE WITH CRSI MSP-1 "MANUAL OF STANDARD PRACTICE"AND ACI 301 "SPECIFICATIONS FOR STRUCTURAL CONCRETE".

3. MINIMUM REINFORCING FOR CONCRETE WALLS AND SLABS SHALL BE AS FOLLOWS:

THICKNESS	REINF EACH WAY	LOCATION
8"	#5@12"	CENTERED
10"	#4@12"	EACH FACE
12"	#5@12"	EACH FACE
14"	#7@12	EACH FACE

PROVIDE LARGER SIZES AND MORE REINFORCING IN SECTIONS OF CONCRETE WHERE REQUIRED BY THE DETAILS ON THE DRAWINGS OR BY THE SPECIFICATIONS.

CONCRETE REINFORCING (CONTINUED)

4. CONCRETE COVER FOR REINFORCING, UNLESS SHOWN OTHERWISE, SHALL BE:

WHEN PLACED ON GROUND:	3"
OTHER CONCRETE SURFACES	2"

5. 90 DEGREE BENDS, UNLESS OTHERWISE SHOWN, SHALL BE ACI 318 STANDARD HOOKS.

6. WALL CORNER AND WALL INTERSECTION REINFORCEMENT BARS SHALL BE CONTINUOUS AROUND CORNERS AND THROUGH COLUMNS OR PILASTERS. REINFORCEMENT SHALL BE EXTENDED INTO CONNECTING WALLS AND LAPPED ON THE OPPOSITE FACE OF THE CONNECTING WALLS.

7. WALL FOOTING CORNER AND INTERSECTION REINFORCEMENT BARS SHALL BE EXTENDED INTO CONNECTING FOOTINGS AND LAPPED ON THE OPPOSITE FACE OF THE CONNECTING FOOTING. OUTSIDE FACE WALL FOOTING REINFORCEMENT SHALL BE LAPPED WITH CORNER BARS. ALL WALL FOOTING REINFORCEMENT SHALL BE CONTINUOUS THROUGH COLUMNS OR PILASTERS FOOTINGS.

8. LAP VERTICAL WALL BARS WITH DOWELS FROM BASE SLABS AND EXTEND INTO TOP FACE OF ROOF SLABS AND LAP WITH TOP SLAB REINFORCEMENT. PROVIDE A MINIMUM OF FOUR FULL HEIGHT VERTICAL BARS WITH MATCHING DOWELS AT WALL ENDS, CORNERS AND INTERSECTIONS WITH SIZE TO MATCH TYPICAL VERTICAL REINFORCING STEEL SHOWN OR REQUIRED BY NOTES ABOVE.

9. LOCATE ELEVATED SLAB AND BEAM TOP BAR SPLICES AT MIDSPAN AND BOTTOM BAR SPLICES AT SUPPORTS.

10. REINFORCING STEEL FOR FOOTINGS AND SLABS ON GRADE SHALL BE ADEQUATELY SUPPORTED ON BAR SUPPORTS WITH SPACERS TO KEEP REINFORCING ABOVE THE PREPARED GRADE. LIFTING REINFORCING OFF GRADE DURING CONCRETE PLACEMENT IS NOT PERMITTED.

11. REFER TO OPENING REINFORCING DETAILS 0330-001.

12. REINFORCEMENT BENDS AND LAPS, UNLESS OTHERWISE NOTED, SHALL SATISFY THE FOLLOWING MINIMUM REQUIREMENTS:

CONCRETE DESIGN STRENGTH = 4,000 PSI (MIN) AT 28 DAYS						GRADE 60 REINFORCING STEEL				
BAR SIZE		#3	#4	#5	#6	#7	#8	#9	#10	#11
LAP SPLICE LENGTH										
SPACING = 3"	TOP BAR	1'-4"	2'-0"	3'-0"	4'-0"	5'-10"	6'-8"	7'-7"	8'-6"	9'-5"
	OTHER BAR	1'-4"	1'-7"	2'-4"	3'-1"	4'-6"	5'-2"	5'-10"	6'-7"	7'-3"
SPACING = 4"	TOP BAR	1'-4"	1'-6"	2'-0"	2'-5"	3'-6"	4'-0"	5'-0"	6'-2"	7'-5"
	OTHER BAR	1'-4"	1'-4"	1'-7"	1'-10"	2'-9"	3'-1"	3'-10"	4'-9"	5'-8"
SPACING ≥ 6"	TOP BAR	1'-4"	1'-6"	2'-0"	2'-5"	3'-6"	4'-0"	5'-0"	6'-2"	7'-5"
	OTHER BAR	1'-4"	1'-4"	1'-7"	1'-10"	2'-9"	3'-1"	3'-10"	4'-9"	5'-8"
EMBEDMENT LENGTH										
SPACING = 3"	TOP BAR	1'-0"	1'-7"	2'-4"	3'-1"	4'-6"	5'-2"	5'-10"	6'-7"	7'-3"
	OTHER BAR	1'-0"	1'-3"	1'-9"	2'-5"	3'-6"	4'-0"	4'-6"	5'-1"	5'-7"
SPACING = 4"	TOP BAR	1'-0"	1'-3"	1'-7"	1'-10"	2'-9"	3'-1"	3'-10"	4'-9"	5'-8"
	OTHER BAR	1'-0"	1'-0"	1'-3"	1'-5"	2'-1"	2'-5"	3'-0"	3'-8"	4'-5"
SPACING ≥ 6"	TOP BAR	1'-0"	1'-3"	1'-7"	1'-10"	2'-9"	3'-1"	3'-10"	4'-9"	5'-8"
	OTHER BAR	1'-0"	1'-0"	1'-3"	1'-5"	2'-1"	2'-5"	3'-0"	3'-8"	4'-5"

1. LAP LENGTHS ARE BASED ON MINIMUM CONCRETE COVER OF 2". LONGER LENGTHS ARE REQUIRED FOR CONCRETE COVER LESS THAN 2".

2. TOP BARS SHALL BE DEFINED AS ANY HORIZONTAL BARS PLACED SUCH THAT MORE THAN 12 INCHES OF CONCRETE IS CAST IN THE MEMBER BELOW THE BAR IN ANY SINGLE POUR. HORIZONTAL WALL BARS ARE CONSIDERED TOP BARS.

3. WHERE 3000 PSI CONCRETE IS USED, INCREASE ABOVE LENGTHS BY 16 PERCENT. WHERE 3500 PSI CONCRETE IS USED, INCREASE ABOVE LENGTHS BY 7 PERCENT.

CAST IN PLACE CONCRETE

1. 28-DAY COMPRESSIVE STRENGTHS:

HYDRAULIC AND BUILDING STRUCTURES PAVEMENT, CURBS AND SIDEWALKS:	4500 PSI
DUCT BANKS AND PIPE ENCASEMENTS NOT INTEGRAL WITH FOUNDATIONS:	3500 PSI

2. DESIGN STRENGTHS ARE SAME AS 28-DAY COMPRESSIVE STRENGTHS.

3. CONTINUOUS WATERSTOP AS SPECIFIED SHALL BE INSTALLED IN CONSTRUCTION JOINTS OF WATER HOLDING BASINS, CHANNELS, AND BELOW GRADE STRUCTURES, EXCEPT WHERE SPECIFICALLY NOTED OTHERWISE.

4. CONSTRUCTION JOINTS INDICATED ARE SUGGESTED LOCATIONS. CONTRACTOR MAY REVISE LOCATION OF JOINTS, BUT SHALL MEET REQUIREMENTS OUTLINED IN THE SPECIFICATIONS. LAYOUT SHOWING ALL CONSTRUCTION JOINT LOCATIONS SHALL BE SUBMITTED FOR REVIEW BY ENGINEER PRIOR TO PLACEMENT OF CONCRETE.

5. ROUGHEN AND CLEAN CONSTRUCTION JOINTS IN WALLS AND SLABS AS SPECIFIED PRIOR TO PLACING ADJACENT CONCRETE.

6. COORDINATE PLACEMENT OF OPENINGS, CURBS, DOWELS, SLEEVES, CONDUITS, BOLTS AND INSERTS PRIOR TO PLACEMENT OF CONCRETE.

7. NO ALUMINUM CONDUIT OR PRODUCTS CONTAINING ALUMINUM OR ANY OTHER MATERIAL INJURIOUS TO THE CONCRETE SHALL BE EMBEDDED IN THE CONCRETE.

8. DO NOT PLACE CONDUIT PARALLEL TO BEAM OR COLUMN REINFORCEMENT UNLESS SPECIFICALLY INDICATED IN DRAWINGS.

9. PATCH FORM TIE HOLES IN ACCORDANCE WITH DETAILS 0310-051 AND 0310-052.

STATE OF OHIO
D. ARNOL GILLUM
E-65157
REGISTERED PROFESSIONAL ENGINEER
2-28-17

NO.	DATE	REVISION	BY	APVD
DSGN	AJ GILLUM	DR J BRADLEY	CHK D LANGE	APVD AJ GILLUM

REUSE OF DOCUMENTS: THIS DOCUMENT, AND THE IDEAS AND DESIGNS INCORPORATED HEREIN, AS AN INSTRUMENT OF PROFESSIONAL SERVICE, IS THE PROPERTY OF CH2M HILL AND IS NOT TO BE USED, IN WHOLE OR IN PART, FOR ANY OTHER PROJECT WITHOUT THE WRITTEN AUTHORIZATION OF CH2M HILL.
© CH2M HILL 2015. ALL RIGHTS RESERVED.

Clermont County

VILLAGE OF NEWTONSVILLE
WASTEWATER TREATMENT PLANT & COLLECTION SYSTEM - PART A
CLERMONT COUNTY WATER RESOURCES DEPARTMENT, CLERMONT COUNTY, OHIO

STRUCTURAL
STRUCTURAL NOTES 1

NTS
VERIFY SCALE
BAR IS ONE INCH ON ORIGINAL DRAWING.
0 1"

DATE	2017-03-31
PROJ	665163
DWG	S-001
SHEET	22 of 91

BID READY

CONCRETE UNIT MASONRY

1. DESIGN COMPRESSIVE STRENGTH, F'M, OF THE FINISHED ASSEMBLY AND MATERIAL PROPERTIES SHALL BE PER THE TABLE BELOW.

2. MORTAR: ASTM C270, TYPE S, HYDRATED. DO NOT USE MASONRY CEMENT.

3. GROUT: ASTM C476 COARSE GROUT. USE OF WATER REDUCERS OR SUPERPLASTICIZERS IS NOT PERMITTED.

4. CONCRETE MASONRY UNITS: ASTM C90, MEDIUM WEIGHT, LINEAR SHRINKAGE SHALL NOT EXCEED 0.065 PERCENT.

6.

DESIGN COMPRESSIVE STRENGTH OF ASSEMBLY F'm (psi)	UNIT STRENGTH (psi)	GROUT STRENGTH (psi) Min (Max)	MORTAR PROPERTIES
1,500	1,900	2,000 (3500)	Type S

7. PLACE COURSES IN WALLS, COLUMNS, AND PILASTERS IN RUNNING BOND PATTERN.

8. PROVIDE MATCHING FOUNDATION DOWELS FOR ALL TYPICAL AND ADDITIONAL VERTICAL BARS.

9. LAP VERTICAL REINFORCING BARS 48 BAR DIAMETERS WITH FOUNDATION DOWELS, EXCEPT DOWEL BARS PLACED EACH FACE IN CMU SHALL BE LAPPED 60 BAR DIAMETERS. LAP ALL OTHER VERTICAL BARS 72 BAR DIAMETERS.

10. LAP ALL VERTICAL BARS IN CANTILEVER WALLS, INCLUDING FOUNDATION DOWELS, 72 BAR DIAMETERS.

11. STAGGER ADJACENT LAP SPLICES BY 24 INCHES WHEN SEPARATED BY 3 INCHES OR LESS.

12. PROVIDE FULL HEIGHT VERTICAL BARS IN 3 CELLS AT WALL CORNERS AND INTERSECTIONS AS SHOWN IN DETAIL 0422-001.

13. PROVIDE JOINT REINFORCING AT CORNER AND INTERSECTIONS WITH LAP LENGTHS AS SHOWN SIMILAR TO DETAIL 0422-001.

14. PROVIDE REINFORCED LINTELS ABOVE AND REINFORCED BOND BEAMS BELOW OPENINGS AS SHOWN IN DETAIL 0422-003.

15. PROVIDE FULL HEIGHT VERTICAL BARS WITH MATCHING DOWELS IN CELLS ADJACENT TO OPENINGS AS SHOWN IN DETAIL 0422-003.

16. GROUTING: PARTIALLY GROUT WALLS:
    A. DO NOT SOLID GROUT WALLS UNLESS SO INDICATED ON THE DRAWINGS.
    B. GROUT ONLY CELLS WITH REINFORCING WHERE REBAR IS SPACED AS CALLED OUT ON THE DRAWINGS.
    C. SOLID GROUT ALL HEADERS AND BOND BEAMS.
    D. SOLID GROUT ADDITIONAL MASONRY AREAS SPECIFICALLY INDICATED ON THE DRAWINGS.

17. DO NOT PLACE CONDUIT IN CELLS CONTAINING PARALLEL REINFORCEMENT.

WELDING

1. WELDS SHALL CONFORM TO AMERICAN WELDING SOCIETY (AWS):
   D1.1, STRUCTURAL WELDING CODE - STEEL
   D1.2, STRUCTURAL WELDING CODE - ALUMINUM
   D1.3, STRUCTURAL WELDING CODE - SHEET STEEL
   D1.6, STRUCTURAL WELDING CODE - STAINLESS STEEL

2. REPAIR WELDS FOUND DEFECTIVE IN ACCORDANCE WITH AWS D1.1 SECTION 5.26.

3. USE INTERMITTENT WELDS AT FIELD WELDS OF EMBED PLATES AND ANGLES TO AVOID SPALLING OR CRACKING OF THE EXISTING CONCRETE.

4. BUTT JOINT WELDS SHALL BE COMPLETE JOINT PENETRATION (CJP) UNLESS INDICATED OTHERWISE.

STRUCTURAL STEEL AND METAL FABRICATIONS

1. STRUCTURAL STEEL SHALL CONFORM TO THE FOLLOWING ASTM STANDARDS:

W-SHAPES	A992
MISCELLANEOUS SHAPES INCLUDING ANGLES, CHANNELS, PLATES, ETC.	A36
STEEL PIPE	A53, GRADE B
STAINLESS STEEL SHAPES	A276

2. ALUMINUM SHALL CONFORM TO THE FOLLOWING ASTM STANDARDS:

STRUCTURAL SHAPES	B308
PLATES	B209

3. STRUCTURAL STEEL SHALL BE FABRICATED AND ERECTED IN CONFORMANCE WITH THE AISC MANUAL OF STEEL CONSTRUCTION, CURRENT EDITION, AND CURRENT OSHA STANDARDS.

4. FASTENERS SHALL BE HIGH STRENGTH BOLTS CONFORMING TO THE FOLLOWING ASTM STANDARDS EXCEPT WHERE SPECIFICALLY INDICATED OTHERWISE:

UNLESS SHOWN OTHERWISE	A325-N
SLIP CRITICAL	A325-SC
ANCHOR BOLTS (AB)	
STAINLESS STEEL	F593, AISI TYPE 316, CONDITION CW
STEEL OR GALVANIZED STEEL	F1554, GR 36 / A153
MACHINE BOLTS (MB)	
STEEL	A307
STAINLESS STEEL	F593, AISI TYPE 316, CONDITION CW
GALVANIZED STEEL	A307 / A153
ALUMINUM	F468, ALLOY 2024-T4

5. ITEMS TO BE EMBEDDED IN CONCRETE SHALL BE CLEAN AND FREE OF OIL, DIRT AND PAINT.

6. NO HOLES OTHER THAN THOSE SPECIFICALLY DETAILED SHALL BE ALLOWED THROUGH STRUCTURAL STEEL MEMBERS. NO CUTTING OR BURNING OF STRUCTURAL STEEL IS PERMITTED WITHOUT THE APPROVAL OF THE ENGINEER.

METAL BUILDING SYSTEMS

1. FOR DESIGN LOADS REFER TO DESIGN CRITERIA SECTION ABOVE WITH FOLLOWING ADDTIONS:
   A. COLLATERAL LOADS: 5 PSF

2. METAL BUILDING FOUNDATIONS HAVE BEEN DESIGNED FOR PRELIMINARY METAL BUILDING COLUMN REACTIONS SHOWN ON THE DRAWINGS. DO NOT CAST METAL BUILDING FOUNDATIONS UNTIL THEIR SIZES HAVE BEEN VERIFIED BY THE ENGINEER FOR THE ACTUAL COLUMN REACTIONS TO BE PROVIDED BY THE METAL BUILDING MANUFACTURER.

3. COLUMN ANCHOR BOLTS SHALL BE DESIGNED BY THE METAL BUILDING MANUFACTURER. ANCHORAGE DESIGN SHALL INCLUDE DETERMINATION OF ANCHOR BOLT MATERIAL, DIAMETER, EMBEDMENT DEPTH, QUANTITY, AND LAYOUT.

4. METAL BUILDING MANUFACTURER TO VERIFY THAT CONCRETE COLUMN PIER DIMENSIONS SHOWN ON THE DRAWINGS ARE LARGE ENOUGH TO ACCOMMODATE METAL BUILDING COLUMN BASE PLATES AND PROVIDE SUFFICIENT EDGE DISTANCE FOR COLUMN ANCHOR BOLTS.

DEFERRED SUBMITTALS

1. DEFERRED SUBMITTALS ARE THOSE PORTIONS OF THE DESIGN WHICH ARE NOT SUBMITTED AT THE TIME OF PERMIT APPLICATION AND WHICH ARE TO BE SUBMITTED TO THE PERMITTING AGENCY FOR ACCEPTANCE PRIOR TO INSTALLATION OF THAT PORTION OF THE WORK OR ARE REQUIRED TO BE SUBMITTED FOR REVIEW ONLY BY THE ENGINEER.

2. WHERE DEFERRED SUBMITTALS INCLUDE ADDITIONAL MATERIALS, INSTALLATION, ANCHORAGE, OR CERTIFICATION OF COMPONENTS THAT REQUIRE SPECIAL INSPECTION AND/OR STRUCTURAL OBSERVATION TO MEET CODE REQUIREMENTS, THE DEFERRED SUBMITTAL SHALL INCLUDE SPECIFIC LINE ITEMS TO BE ADDED TO THE APPROPRIATE TABLES IN THE PROJECT'S STATEMENT OF SPECIAL INSPECTIONS PLAN IF THEY ARE NOT ALREADY IDENTIFIED.

3. THE FOLLOWING IS A LIST OF DEFERRED SUBMITTALS PER SECTION 107.3.4.2 OF 2009 IBC THAT ARE EXPECTED TO CONTAIN STRUCTURAL CALCULATIONS OR SAFETY RELATED SYSTEM INFORMATION FOR REVIEW TO MEET BUILDING PERMITTING REQUIREMENTS FOR DESIGNED SYSTEMS. PRIOR TO INSTALLATION OF THE INDICATED STRUCTURAL ELEMENT, EQUIPMENT, DISTRIBUTION SYSTEM, OR COMPONENT OR ITS ANCHORAGE, THE CONTRACTOR SHALL SUBMIT THE REQUIRED CALCULATIONS AND SUPPORTING DATA AND DRAWINGS FOR REVIEW AND ACCEPTANCE BY THE ENGINEER. ADDITIONALLY, ACCEPTANCE INDICATED ON THE ENGINEER'S COMMENT FORM, ALONG WITH THE COMPLETED, FINAL SUBMITTAL SHALL THEN BE SUBMITTED TO THE PERMITTING AGENCY BY THE CONTRACTOR AND APPROVED PRIOR TO INSTALLATION OF THESE ITEMS.

SPECIFICATION SECTION	CODE REQUIRED DEFERRED SUBMITTALS FOR REVIEW BY PERMITTING AGENCY
05 52 00	METAL RAILINGS
13 34 19	METAL BUILDING SYSTEMS
33 05 16.13	PRECAST CONCRETE UTILITY STRUCTURES
40 05 15	PIPING SUPPORT SYSTEMS
OTHER	ANY EQUIPMENT OR COMPONENT IN WHICH A TECHNICAL SPECIFICATION REQUIRES SUBMITTAL OF EQUIPMENT OR ANCHORAGE SYSTEM CALCULATIONS

STATE OF OHIO
ARNOL GILLUM
E-65157
REGISTERED
PROFESSIONAL ENGINEER
3-31-17

NO.	DATE	REVISION	BY	APVD

DSGN AJ GILLUM | DR J BRADLEY | CHK D LANGE | APVD AJ GILLUM

©CH2M HILL 2015. ALL RIGHTS RESERVED.

REUSE OF DOCUMENTS: THIS DOCUMENT, AND THE IDEAS AND DESIGNS INCORPORATED HEREIN, AS AN INSTRUMENT OF PROFESSIONAL SERVICE, IS THE PROPERTY OF CH2M HILL AND IS NOT TO BE USED, IN WHOLE OR IN PART, FOR ANY OTHER PROJECT WITHOUT THE WRITTEN AUTHORIZATION OF CH2M HILL.

Clermont County

VILLAGE OF NEWTONSVILLE
WASTEWATER TREATMENT PLANT & COLLECTION SYSTEM - PART A
CLERMONT COUNTY WATER RESOURCES DEPARTMENT, CLERMONT COUNTY, OHIO

ch2m

STRUCTURAL

STRUCTURAL NOTES 2

NTS

VERIFY SCALE

BAR IS ONE INCH ON ORIGINAL DRAWING.
0 1"

DATE	2017-03-31
PROJ	665163
DWG	S-002
SHEET	23 of 91

BID READY

STATEMENT OF SPECIAL INSPECTIONS

GENERAL NOTES

1. THE STATEMENT OF SPECIAL INSPECTIONS DRAWINGS PROVIDE PROJECT COMPLIANCE WITH THE PROVISIONS OF THE INTERNATIONAL BUILDING CODE (IBC) CHAPTER 17 FOR SPECIAL INSPECTION, AND STRUCTURAL OBSERVATION AND TESTING FOR WIND AND SEISMIC RESISTANCE AS AMENDED BY THE STATE OF OHIO. EXCEPT WHERE OTHERWISE NOTED, THIS INSPECTION IS OWNER FURNISHED.

2. STANDARD SPECIAL INSPECTION REQUIREMENTS FOR NONSTRUCTURAL COMPONENTS ARE CONTAINED IN TABLE 1.

3. STANDARD SPECIAL INSPECTION REQUIREMENTS FOR STRUCTURAL COMPONENTS, REGARDLESS OF WIND OR SEISMIC DESIGN CATEGORIES, ARE CONTAINED IN TABLE 2. STANDARD TESTING REQUIREMENTS FOR STRUCTURAL COMPONENTS ARE CONTAINED IN TABLE 3.

4. FOR ADDITIONAL REQUIREMENTS, REFER TO SPECIFICATION SECTION 01 45 33, SPECIAL INSPECTION, AND TESTING. THESE INCLUDE:
   - A. CONTRACTOR'S REQUIREMENTS TO PROVIDE ACCESS TO THE WORK FOR REQUIRED INSPECTIONS, AND TO PROVIDE NOTICE OF REQUIRED INSPECTIONS AND STRUCTURAL OBSERVATION.
   - B. DEFINITIONS AND TERMINOLOGY USED IN THIS STATEMENT OF SPECIAL INSPECTIONS

SPECIAL INSPECTION

1. SPECIAL INSPECTION WILL BE IN ACCORDANCE WITH IBC SECTIONS 1704 AND 1705 TOGETHER WITH LOCAL AND STATE AMENDMENTS. REFER TO THE TABLES CONTAINED ON THIS GENERAL SHEET FOR PROJECT SPECIFIC INSPECTION TYPES AND FREQUENCIES.

2. SPECIAL INSPECTIONS WILL BE PROVIDED BY A CERTIFIED OR QUALIFIED INSPECTOR AND ASSOCIATED TESTING WILL BE PERFORMED BY AN APPROVED ACCREDITED INDEPENDENT AGENCY. INSPECTORS FOR EACH SYSTEM AND MATERIAL WILL BE INTERNATIONAL CODE COUNCIL (ICC) CERTIFIED OR OTHERWISE APPROVED BY THE BUILDING OFFICIAL.

3. THE SPECIAL INSPECTOR WILL OBSERVE THE INDICATED WORK FOR COMPLIANCE WITH THE APPROVED CONTRACT DOCUMENTS AND SUBMIT RECORDS OF INSPECTION. ALL DISCREPANCIES WILL BE BROUGHT TO THE IMMEDIATE ATTENTION OF THE CONTRACTOR FOR CORRECTION.

4. SPECIAL INSPECTION AND ASSOCIATED TESTING REPORTS WILL BE SUBMITTED TO THE ENGINEER, CONTRACTOR, BUILDING OFFICIAL, AND OWNER WITHIN ONE WEEK OF INSPECTION OR WITHIN ONE WEEK OF TEST COMPLETION. INSPECTIONS FOR WHICH REPORTING WILL BE REQUIRED ARE NOTED IN THE TABLES CONTAINED ON THIS STATEMENT OF SPECIAL INSPECTIONS.

5. AT THE CONCLUSION OF CONSTRUCTION, A FINAL REPORT DOCUMENTING REQUIRED SPECIAL INSPECTIONS AND CORRECTION OF PREVIOUSLY NOTED DISCREPANCIES WILL BE SUBMITTED.

GEOTECHNICAL OBSERVATION

1. ALL FOUNDATION BEARING SURFACES SHALL BE INSPECTED BY GEOTECHNICAL ENGINEER PRIOR TO PLACEMENT OF REINFORCING STEEL. ADDITIONAL SPECIAL INSPECTION REQUIREMENTS ARE LISTED IN TABLE 1.

2. GEOTECHNICAL TESTING REQUIREMENTS ARE LISTED IN TABLE 1.

SPECIAL INSPECTION FOR SEISMIC RESISTANCE

1. SPECIAL INSPECTION REQUIREMENTS FOR SEISMIC RESISTANCE IN ACCORDANCE WITH IBC SECTION 1705.3 AND 1707 ARE NOT APPLICABLE TO THIS PROJECT.

SPECIAL INSPECTION FOR WIND RESISTANCE

1. SPECIAL INSPECTION REQUIREMENTS FOR WIND RESISTANCE IN ACCORDANCE WITH IBC SECTION 1705.4 AND 1706 ARE NOT APPLICABLE TO THIS PROJECT.

TABLE 1
REQUIRED NON-STRUCTURAL SPECIAL INSPECTION
REFER TO SPECIFICATION SECTION 01 45 33

SYSTEM OR MATERIAL	2009 IBC CODE REFERENCE	REFERENCED STANDARD	PERIODIC OWNER FURNISHED SPECIAL INSPECTION (SEE NOTE 1)	CONTINUOUS OWNER FURNISHED SPECIAL INSPECTION	REQUIRED REPORTING BY SPECIAL INSPECTOR TO DESIGNATED DISTRIBUTION LIST	COMMENTS	TESTING FOR SPECIAL INSPECTION
GEOTECHNICAL							
1. SOILS:							
A. VERIFY MATERIALS BELOW SHALLOW FOUNDATIONS ARE ADEQUATE TO ACHIEVE THE DESIGN BEARING CAPACITY	1704.7, 1803.5, 1803.6	SECTION 31 23 13, SUBGRADE PREPARATION	X		X	PROFESSIONAL OBSERVATION BY GEOTECHNICAL ENGINEER	
B. VERIFY EXCAVATIONS ARE EXTENDED TO PROPER DEPTH AND HAVE REACHED PROPER MATERIAL	1704.7	SECTION 31 23 16, EXCAVATION	X		X	PROFESSIONAL OBSERVATION BY GEOTECHNICAL ENGINEER	
C. PERFORM CLASSIFICATION AND TESTING OF COMPACTED FILL MATERIALS	1704.7	SECTION 31 23 23, FILL AND BACKFILL	X		X		SEE TABLE 3 FOR GRADATION TEST REQUIREMENTS
D.VERIFY USE OF PROPER MATERIALS, DENSITIES, AND LIFT THICKNESSES DURING PLACEMENT AND COMPACTION OF COMPACTED FILL	1704.7	SECTION 31 23 23, FILL AND BACKFILL		X	X		SEE TABLE 3 FOR DENSITY TEST REQUIREMENTS
E. PRIOR TO PLACEMENT OF COMPACTED FILL, OBSERVE SUBGRADE AND VERIFY THAT SITE HAS BEEN PREPARED PROPERLY	1704.7	SECTION 31 23 13, SUBGRADE PREPARATION	X		X	PROFESSIONAL OBSERVATION BY GEOTECHNICAL ENGINEER	SEE TABLE 3 FOR DENSITY TEST **[AND PROOF ROLLING]** REQUIREMENTS
GENERAL							
1. INSTALLATION OF MATERIALS THAT REQUIRE ADDITIONAL MANUFACTURER'S INSTRUCTIONS BEYOND CODE REQUIREMENTS	1703.4.2, 1704.15 ITEM 3	ICC-ES EVALUATION REPORTS		X	X		
STRUCTURAL							
SEE TABLE 2.							

NOTES:
1. PERIODIC INSPECTION IS DEFINED AS INSPECTION BY THE SPECIAL INSPECTOR OF ALL MATERIALS AND SYSTEMS, IN SOME CASES PERFORMED DURING THEIR PLACEMENT AND IN ALL CASES PERFORMED UPON COMPLETION OF THEIR PLACEMENT. THE COMPLETION INSPECTION SHALL BE PERFORMED SO THAT WORK CAN BE CORRECTED PRIOR TO OTHER RELATED WORK PROCEEDING

TABLE 2
REQUIRED STRUCTURAL SPECIAL INSPECTION

SYSTEM	2009 IBC CODE REFERENCE	REFERENCED STANDARD	PERIODIC OWNER FURNISHED SPECIAL INSPECTION (SEE NOTE 1)	CONTINUOUS OWNER FURNISHED SPECIAL INSPECTION	REQUIRED REPORTING BY SPECIAL INSPECTOR TO DESIGNATED DISTRIBUTION LIST	COMMENTS	TESTING FOR SPECIAL INSPECTION
CONCRETE							
1. INSPECTION OF REINFORCING STEEL AND PLACEMENT	1704.4, 1903.1, 1907.1, 1907.7, 1913.4	ACI 318: 3.5, 7.1-7.7	X		X		
2. INSPECT BOLTS TO BE INSTALLED IN CONCRETE PRIOR TO AND DURING PLACEMENT OF CONCRETE WHERE ALLOWABLE LOADS HAVE BEEN INCREASED	1704.4, 1911.5	ACI 318: 8.1.3, 21.2.8		X	X		
3. INSPECTION OF ANCHORS INSTALLED IN HARDENED CONCRETE.	1912.1	ACI 318: 3.8.6, 8.1.3, 21.2.8	X		X		
4. VERIFY USE OF REQUIRED DESIGN MIX	1704.4, 1904.2.2, 1905.2-1905.4, 1913.2, 1913.3	ACI 318: Ch. 4, 5.2-5.4	X		X		
5. AT THE TIME FRESH CONCRETE IS SAMPLED TO FABRICATE SPECIMENS FOR STRENGTH TESTS, PERFORM SLUMP AND AIR CONTENT TESTS, AND DETERMINE THE TEMPERATURE OF THE CONCRETE	1704.4, 1905.6, 1913.10	ASTM C 172, ASTM C 31, ACI 318: 5.6, 5.8		X	X		SEE TABLE 3 FOR CONCRETE TEST REQUIREMENTS
6. INSPECTION OF CONCRETE AND SHOTCRETE PLACEMENT FOR PROPER APPLICATION TECHNIQUES	1704.4, 1905.9, 1905.10, 1913.6, 1913.7, 1913.8	ACI 318: 5.9, 5.10		X	X		
7. INSPECTION FOR MAINTENANCE OF SPECIFIED CURING TEMPERATURE AND TECHNIQUES	1704.4, 1905.11-1905.13, 1913.9	ACI 318: 5.11-5.13	X		X		
8. INSPECT FORMWORK FOR SHAPE, LOCATION AND DIMENSIONS OF THE CONCRETE MEMBER BEING FORMED	1704.4, 1906.1	ACI 318: 6.1.1	X		X		
MASONRY LEVEL 1							
1. VERIFY COMPLIANCE WITH INSPECTION PROVISIONS OF CONSTRUCTION DOCUMENTS AND APPROVED SUBMITTALS	1704.5.2	ACI 530.1: Art. 1.5	X		X		
2. VERIFICATION OF f'_m AND f'_{AAC} PRIOR TO CONSTRUCTION EXCEPT WHERE SPECIFICALLY EXCEMPTED BY CODE	1704.5.2	ACI 530.1: Art. 1.4B	X		X		
3. FOR SELF-CONSOLIDATING GROUT: VERIFICATION OF SLUMP FLOW AND VSI AS DELIVERED TO THE SITE.	1704.5.2	ACI 530.1: Art. 1.5B.1.b.3		X	X		
4. AS MASONRY CONSTRUCTION BEGINS, THE FOLLOWING SHALL BE VERIFIED TO ENSURE COMPLIANCE:							
A. PROPORTIONS OF SITE-PREPARED MORTAR	1704.5.2	ACI 530.1: Art. 2.6A	X		X		
B. CONSTRUCTION OF MORTAR JOINTS	1704.5.2	ACI 530.1: Art. 3.3B	X		X		
C. LOCATION OF REINFORCEMENT AND CONNECTORS	1704.5.2	ACI 530.1: Art. 3.4, 3.6A	X		X		
E. LOCATION, GRADE, AND SIZE OF PRESTRESSING TENDONS AND ANCHORAGES	1704.5.2	ACI 530.1: Art. 2.4B, 2.4H	X		X		
5. THE INSPECTION PROGRAM SHALL VERIFY:							
A. TYPE, SIZE AND LOCATION OF ANCHORS, INCLUDING OTHER DETAILS OF ANCHORAGE OF MASONRY TO STRUCTURAL MEMBERS, FRAMES, OR OTHER CONSTRUCTION	1704.5.2	ACI 530: Sec. 1.2.2(e), 1.16.1	X		X		
B. SPECIFIED SIZE, GRADE AND TYPE OF REINFORCEMENT, ANCHOR BOLTS, PRESTRESSING TENDONS, AND ANCHORAGES	1704.5.2	ACI 530: Sec. 1.15 ACI 530.1: Art. 2.4, 3.4	X		X		
C. PREPARATION, CONSTRUCTION, AND PROTECTION OF MASONRY DURING COLD WEATHER (TEMP. BELOW 40 DEGREES F) OR HOT WEATHER (TEMP. ABOVE 90 DEGREES F)	1704.5.2, 2104.3, 2104.4	ACI 530.1: Art. 1.8C, 1.8D	X		X		

STATE OF OHIO
ARNOL GILLUM
E-65157
REGISTERED PROFESSIONAL ENGINEER
3-31-17

NO.	DATE	REVISION	BY	APVD

DSGN AJ GILLUM | DR J BRADLEY | CHK D LANGE | APVD AJ GILLUM

Clermont County

VILLAGE OF NEWTONSVILLE
WASTEWATER TREATMENT PLANT & COLLECTION SYSTEM - PART A
CLERMONT COUNTY WATER RESOURCES
DEPARTMENT, CLERMONT COUNTY, OHIO

ch2m:

STRUCTURAL

SPECIAL INSPECTIONS 1

NTS
VERIFY SCALE
BAR IS ONE INCH ON ORIGINAL DRAWING.
0 1"

DATE	2017-03-31
PROJ	665163
DWG	S-003
SHEET	24 of 91

BID READY

REUSE OF DOCUMENTS: THIS DOCUMENT, AND THE IDEAS AND DESIGNS INCORPORATED HEREIN, AS AN INSTRUMENT OF PROFESSIONAL SERVICE, IS THE PROPERTY OF CH2M HILL AND IS NOT TO BE USED, IN WHOLE OR IN PART, FOR ANY OTHER PROJECT WITHOUT THE WRITTEN AUTHORIZATION OF CH2M HILL.
©CH2M HILL 2015. ALL RIGHTS RESERVED.

TABLE 2
REQUIRED STRUCTURAL SPECIAL INSPECTION

SYSTEM	2009 IBC CODE REFERENCE	REFERENCED STANDARD	PERIODIC OWNER FURNISHED SPECIAL INSPECTION (SEE NOTE 1)	CONTINUOUS OWNER FURNISHED SPECIAL INSPECTION	REQUIRED REPORTING BY SPECIAL INSPECTOR TO DESIGNATED DISTRIBUTION LIST	COMMENTS	TESTING FOR SPECIAL INSPECTION
MASONRY LEVEL 1 CONTINUED							
6. PRIOR TO GROUTING, THE FOLLOWING SHALL BE VERIFIED TO ENSURE COMPLIANCE:							
A. GROUT SPACE IS CLEAN	1704.5.2	ACI 530.1: Art. 3.2D	X		X		
B. PLACEMENT OF REINFORCEMENT AND CONNECTORS.	1704.5.2	ACI 530: Sec. 1.13 ACI 530.1: Art. 3.4	X		X		
C. PROPORTIONS OF SITE-PREPARED GROUT.	1704.5.2	ACI 530.1: Art. 2.6B	X		X		
D. CONSTRUCTION OF MORTAR JOINTS	1704.5.2	ACI 530.1: Art. 3.3B	X		X		
7. GROUT PLACEMENT SHALL BE VERIFIED TO ENSURE COMPLIANCE	1704.5.2	ACI 530.1: Art. 3.5		X	X		
A. GROUTING OF PRESTRESSING BONDED TENDONS	1704.5.2	ACI 530.1: Art. 3.6C		X	X		
8. PREPARATION OF ANY REQUIRED GROUT SPECIMENS, MORTAR SPECIMENS, AND/OR PRISMS SHALL BE OBSERVED	1704.5.2, 2105.2.2, 2105.3	ACI 530.1: Art. 1.4		X	X		SEE TABLE 3 FOR UNIT STRENGTH TESTS (PRISM TEST) FOR MASONRY
STEEL							
1. MATERIAL VERIFICATION OF HIGH-STRENGTH BOLTS, NUTS, AND WASHERS:							
A. IDENTIFICATION MARKINGS TO CONFORM TO ASTM STANDARDS SPECIFIED IN THE APPROVED CONSTRUCTION DOCUMENTS	1704.3	Applicable ASTM Material Specifications; AISC 360: Sec. A3.3	X		X		
B. MANUFACTURER'S CERTIFICATE OF COMPLIANCE REQUIRED	1704.3		X		X		
2. INSPECTION OF HIGH-STRENGTH BOLTING:							
A. SNUG-TIGHT JOINTS	1704.3.3	AISC 360: Sec. M2.5	X		X		
3. MATERIAL VERIFICATION OF STRUCTURAL STEEL.							
A. FOR STRUCTURAL STEEL, IDENTIFICATION MARKINGS TO CONFORM TO AISC 360	1704.3, 1708.3, 2203.1	AISC 360: Sec. M5.5	X		X		
B. FOR OTHER STEEL, IDENTIFICATION MARKINGS TO CONFORM TO ASTM STANDARDS SPECIFIED IN THE APPROVED CONSTRUCTION DOCUMENTS	1704.3, 1708.3, 2203.1	APPLICABLE ASTM MATERIAL STANDARDS	X		X		
C. MANUFACTURER'S CERTIFIED TEST REPORTS	1704.3		X				
ALUMINUM							
1. MATERIAL VERIFICATION OF ALUMINUM:							
A. IDENTIFICATION MARKINGS TO CONFORM TO ASTM STANDARDS SPECIFIED IN THE APPROVED CONSTRUCTION DOCUMENTS	1704.15 ITEM 2				X		
B. MANUFACTURERS' CERTIFIED MILL TEST REPORTS	1704.15 ITEM 2				X		

NOTES:
1. PERIODIC INSPECTION IS DEFINED AS INSPECTION BY THE SPECIAL INSPECTOR OF ALL MATERIALS AND SYSTEMS, IN SOME CASES PERFORMED DURING THEIR PLACEMENT AND IN ALL CASES PERFORMED UPON COMPLETION OF THEIR PLACEMENT. THE COMPLETION INSPECTION SHALL BE PERFORMED SO THAT WORK CAN BE CORRECTED PRIOR TO OTHER RELATED WORK PROCEEDING

TABLE 3
TESTING FOR REQUIRED SPECIAL INSPECTION
REFER TO SPECIFICATION SECTION 01 45 33

MATERIAL	TYPE OR SCOPE	STANDARD	2009 IBC CODE REFERENCE	FREQUENCY	BY WHOM	REQUIRED REPORTING TO DESIGNATED DISTRIBUTION LIST	COMMENTS
GEOTECHNICAL							
CONTROLLED FILL	GRADATION	ASTM D422	1704.7	SECTION 31 23 23, FILL AND BACKFILL	OWNER'S TESTING AGENCY	X	
CONTROLLED FILL	DENSITY	ASTM D1556, D2922	1704.7	SECTION 31 23 23, FILL AND BACKFILL	OWNER'S TESTING AGENCY	X	
PREPARED SUBGRADE	DENSITY	ASTM D1556, D2922	1704.7	SECTION 31 23 13, SUBGRADE PREPARATION	OWNER'S TESTING AGENCY	X	
CONCRETE							
CONCRETE	STRENGTH	ASTM C39	1704.4, 1905.6	ONCE EACH DAY, BUT NOT LESS THAN ONE SAMPLE FOR EACH 150 CUBIC YARDS OR 5,000 SFT OF WALLS OR SLABS PLACED	OWNER'S TESTING AGENCY	X	
CONCRETE	SLUMP	ASTM C143, C94	1704.4	ONE SAMPLE PER STRENGTH TEST	OWNER'S TESTING AGENCY	X	
CONCRETE	AIR CONTENT	ASTM C231, C94	1704.4	ONE SAMPLE PER STRENGTH TEST	OWNER'S TESTING AGENCY	X	
CONCRETE	TEMPERATURE	ASTM C1064	1704.4	ONE SAMPLE PER STRENGTH TEST	OWNER'S TESTING AGENCY	X	
MASONRY							
CONCRETE MASONRY	UNIT STRENGTH	ASTM C140	2105.2.2.1.2	TEST 6 UNITS PER EVERY 50,000 OR FRACTION THEREOF PRIOR TO CONSTRUCTION	OWNER'S TESTING AGENCY	X	
MASONRY	COMPRESSIVE STRENGTH OF GROUT	ASTM C1019	2105.2.2.1	THREE SAMPLES PRIOR TO CONSTRUCTION	OWNER'S TESTING AGENCY	X	

TABLE 4
REQUIRED SPECIAL INSPECTION FOR SEISMIC RESISTANCE FOR STRUCTURAL SYSTEMS
REFER TO TABLE 2 FOR STANDARD STRUCTURAL SPECIAL INSPECTION REQUIREMENT
(NOT USED)

TABLE 5
REQUIRED SPECIAL INSPECTION FOR WIND RESISTANCE
FOR STRUCTURAL SYSTEMS
(NOT USED)

STATE OF OHIO
ARNOL GILLUM
E-65157
REGISTERED PROFESSIONAL ENGINEER
2-31-17

NO.	DATE	REVISION	BY	APVD

DSGN	DR	CHK	APVD
AJ GILLUM	J BRADLEY	D LANGE	AJ GILLUM

©CH2M HILL 2015. ALL RIGHTS RESERVED.

REUSE OF DOCUMENTS: THIS DOCUMENT, AND THE IDEAS AND DESIGNS INCORPORATED HEREIN, AS AN INSTRUMENT OF PROFESSIONAL SERVICE, IS THE PROPERTY OF CH2M HILL AND IS NOT TO BE USED, IN WHOLE OR IN PART, FOR ANY OTHER PROJECT WITHOUT THE WRITTEN AUTHORIZATION OF CH2M HILL.

Clermont County

VILLAGE OF NEWTONSVILLE
WASTEWATER TREATMENT PLANT & COLLECTION SYSTEM - PART A
CLERMONT COUNTY WATER RESOURCES DEPARTMENT, CLERMONT COUNTY, OHIO

ch2m

STRUCTURAL

SPECIAL INSPECTIONS 2

NTS
VERIFY SCALE
BAR IS ONE INCH ON ORIGINAL DRAWING.
0 1"

DATE	2017-03-31
PROJ	665163
DWG	S-004
SHEET	25 of 91

BID READY

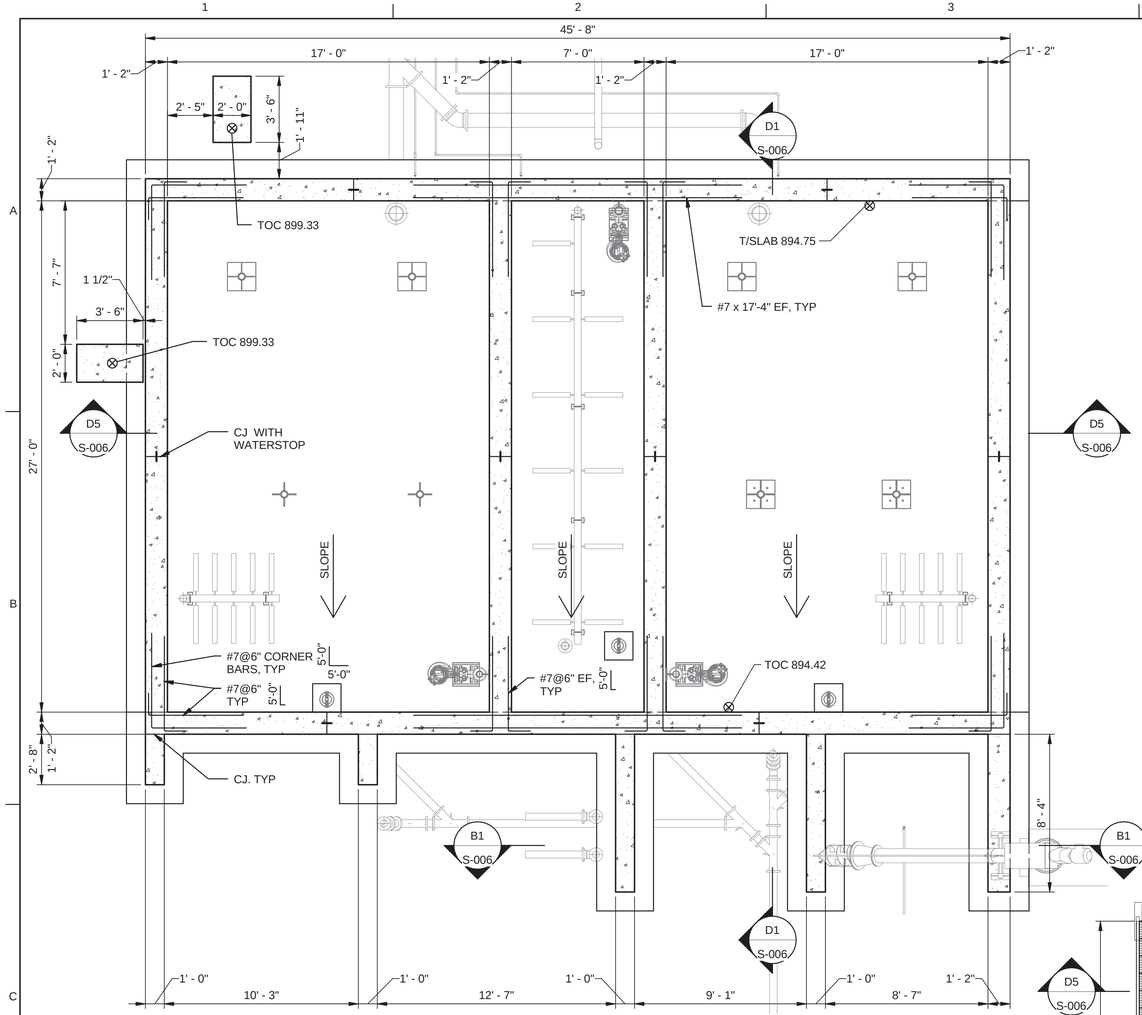

BASE PLAN

1/4" = 1'-0"

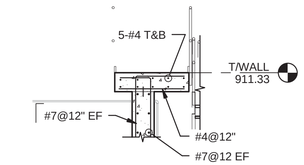

A4 SECTION
1/4" = 1'-0"
S-005

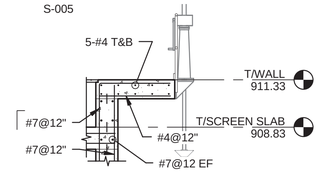

B4 SECTION
1/4" = 1'-0"
S-005

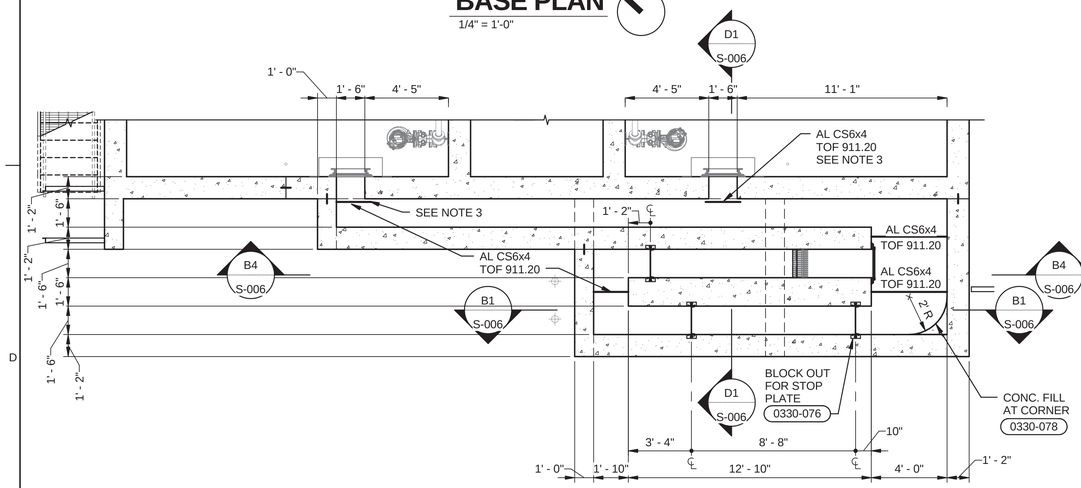

PARTIAL PLAN AT 909.60

1/4" = 1'-0"

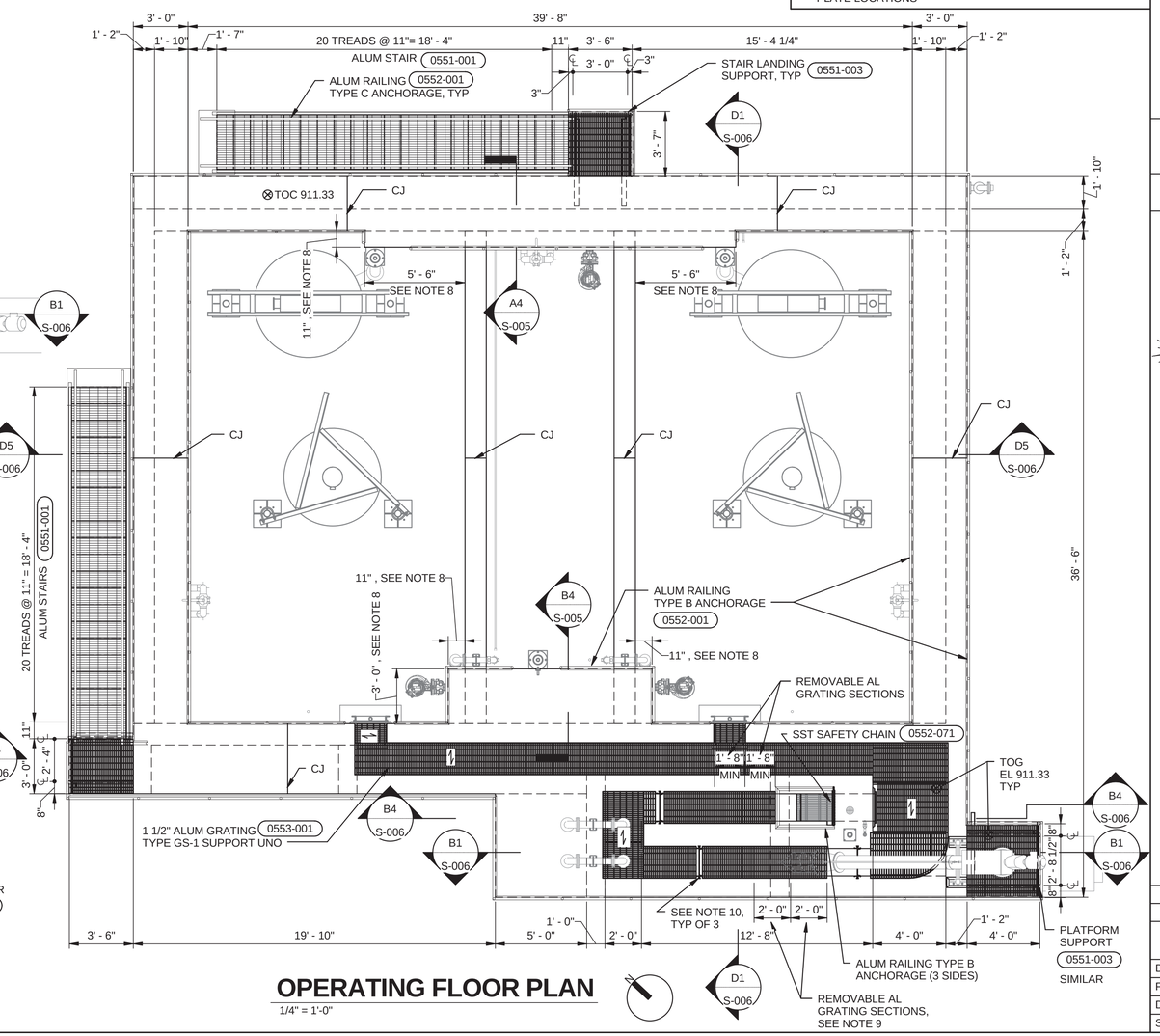

OPERATING FLOOR PLAN

1/4" = 1'-0"

GENERAL SHEET NOTES:

A. REFER TO DRAWING S-001 AND S-002 FOR STRUCTURAL GENERAL NOTES.

B. REFER TO PROCESS MECHANICAL DRAWINGS FOR WALL PENETRATIONS, PIPING ELEVATIONS, EQUIPMENT AND ADDITIONAL INFORMATION.

C. HYDROSTATIC TEST ELEVATION SHALL BE 911.00.

D. WALL CONCRETE SHALL BE AT 100% OF DESIGN STRENGTH PRIOR TO BACKFILLING.

SHEET NOTES:

1 FOR CONSTRUCTION JOINT AT ELEVATED SLAB, SEE DETAIL 0315-152. FOR CONSTRUCTION JOINTS AT BASE SLAB TO WALL, SEE DETAIL 0315-154. FOR VERTICAL WALL CONSTRUCTION JOINTS, SEE DETAIL 0315-151.

2. ALL CONSTRUCTION JOINTS SHOWN IN WALL AND SLAB ARE SUGGESTED LOCATIONS, SEE WALL CONSTRUCTION JOINT SPACING DETAIL 0315-131 FOR SPACING LIMITS.

3. ATTACH TO FACE OF WALL WITH (2) 5/8" SST ADHESIVE ANCHORS AT 3" GAGE, EA SIDE. PROVIDE 8" MIN CLEARANCE TO VERTICAL EDGE OF WALL.

4. FOR TYPICAL WALL CORNER AND INTERSECTION REINFORCEMENT, SEE DETAILS 0330-003 AND 0330-004.

5. FOR ADDITIONAL REINFORCEMENT AT HORIZ. CONSTRUCTION JOINTS, SEE DETAILS 0330-004.

6. FOR ADDITIONAL REINFORCEMENT REQUIRED AROUND OPENINGS, SEE DETAIL 0330-001.

7. ALL ALUMINUM FRAMING TO CONCRETE CONNECTIONS SHALL BE PER 0514-056.

8. COORDINATE SLAB EXTENSION WITH EQUIPMENT MANUFACTURER.

9. COORDINATE OPENING IN ALUMINUM GRATING AND SIZE OF REMOVABLE ALUMINUM GRATING SECTIONS WITH THE MECHANICAL SCREEN MANUFACTURER.

10. PROVIDE 8" WIDE REMOVABLE ALUMINUM GRATING SECTION OVER STOP PLATES. REFER TO DRAWING D-004 FOR STOP PLATE LOCATIONS

STATE OF OHIO
ARNOL GILLUM
E-65157
3-31-17
REGISTERED PROFESSIONAL ENGINEER

NO.	DATE	REVISION	BY	APVD
DSGN	AJ GILLUM	DR J. BRADLEY	CHK D LANGE	APVD AJ GILLUM

©CH2M HILL 2014. ALL RIGHTS RESERVED.

REUSE OF DOCUMENTS: THIS DOCUMENT, AND THE IDEAS AND DESIGNS INCORPORATED HEREIN, AS AN INSTRUMENT OF PROFESSIONAL SERVICE, IS THE PROPERTY OF CH2M HILL AND IS NOT TO BE USED, IN WHOLE OR IN PART, FOR ANY OTHER PROJECT WITHOUT THE WRITTEN AUTHORIZATION OF CH2M HILL.

Clermont County

VILLAGE OF NEW TONSVILLE
WASTEWATER TREATMENT PLANT & COLLECTION SYSTEM - PART A
CLERMONT COUNTY WATER RESOURCES DEPARTMENT, CLERMONT COUNTY, OHIO

ch2m

STRUCTURAL

SCREEN/SEQUENCING BATCH REACTOR PLANS

1/4" = 1'-0"

VERIFY SCALE

BAR IS ONE INCH ON ORIGINAL DRAWING
0 1"

DATE	2017-03-31
PROJ	665163
DWG	S-005
SHEET	26 of 91

BID READY

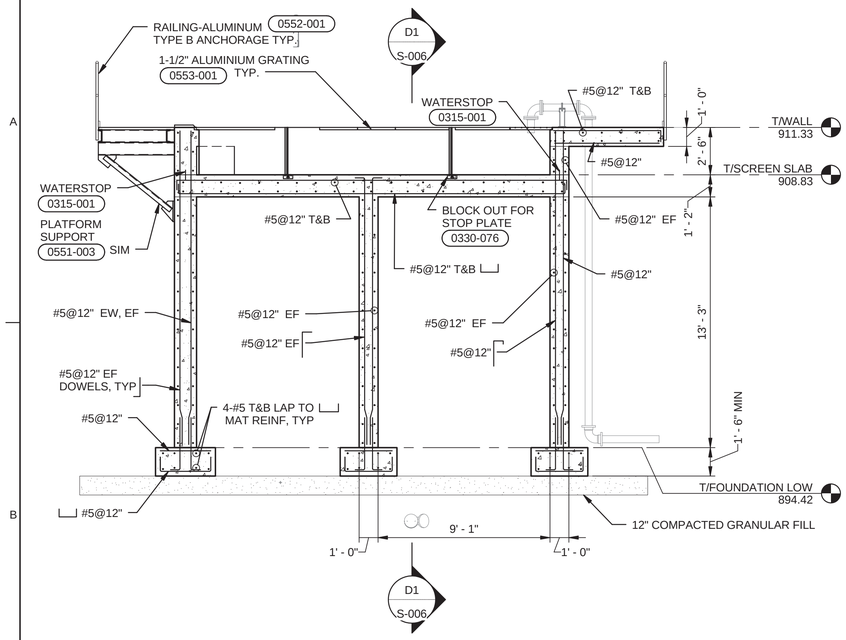

B1 SECTION
1/4" = 1'-0"
S-005

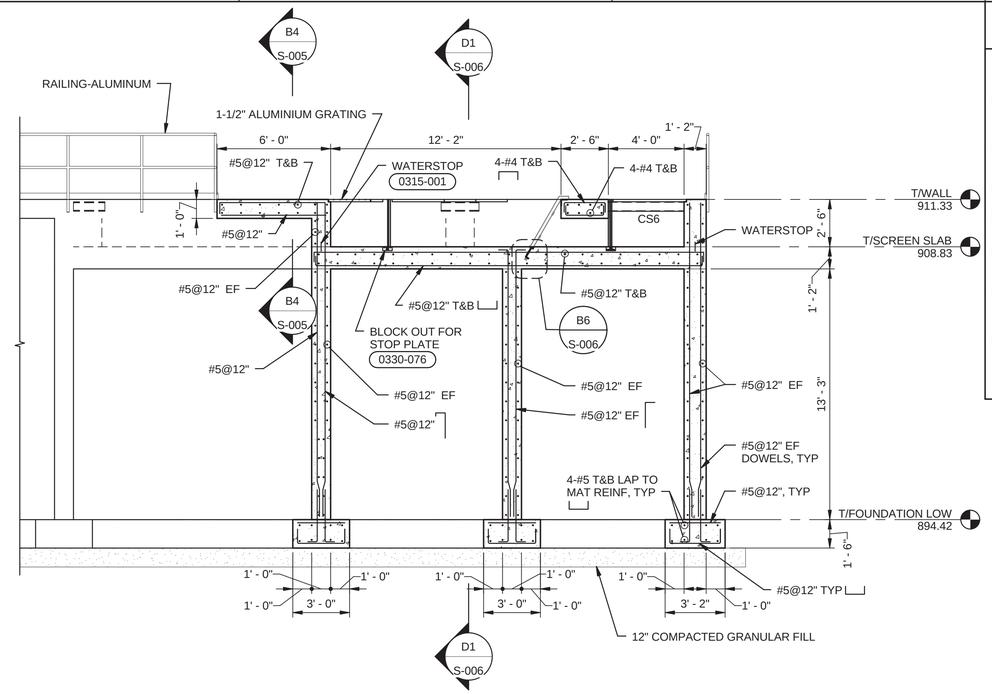

B4 SECTION
1/4" = 1'-0"
S-005

GENERAL SHEET NOTES:

A. REFER TO DWGS S-001 AND S-002 FOR STRUCTURAL GENERAL NOTES.

B. REFER TO PROCESS MECHANICAL DRAWINGS FOR WALL PENETRATIONS, PIPING ELEVATIONS, EQUIPMENT AND ADDITIONAL INFORMATION.

C. FOR CONSTRUCTION JOINTS AT BASE SLAB TO WALL, SEE DETAIL 0315-154.

D. NOT USED

E. FOR ADDITIONAL REINFORCEMENT AT HORIZ. CONSTRUCTION JOINTS, SEE DETAIL 0330-004.

F. FOR ADDITIONAL REINFORCEMENT REQUIRED AROUND OPENINGS, SEE DETAIL 0330-001.

G. ALL RAILINGS SHALL BE 2 RAIL ALUMINIUM, REFER TO DETAIL 0552-001. ALL RAIL POST ANCHORAGE SHALL BE TYPE B ANCHORAGE, U.N.O.

H. ALL GRATING SHALL BE ALUMINIUM 1-1/2 LIGHT DUTY U.N.O. REFER TO DETAIL 0553-001 FOR GRATING REQUIREMENTS AND CONNECTION DETAILS.

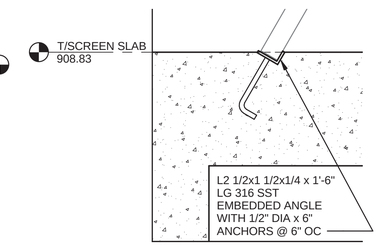

B6 EMBEDDED ANGLE
1 1/2" = 1'-0"
S-006

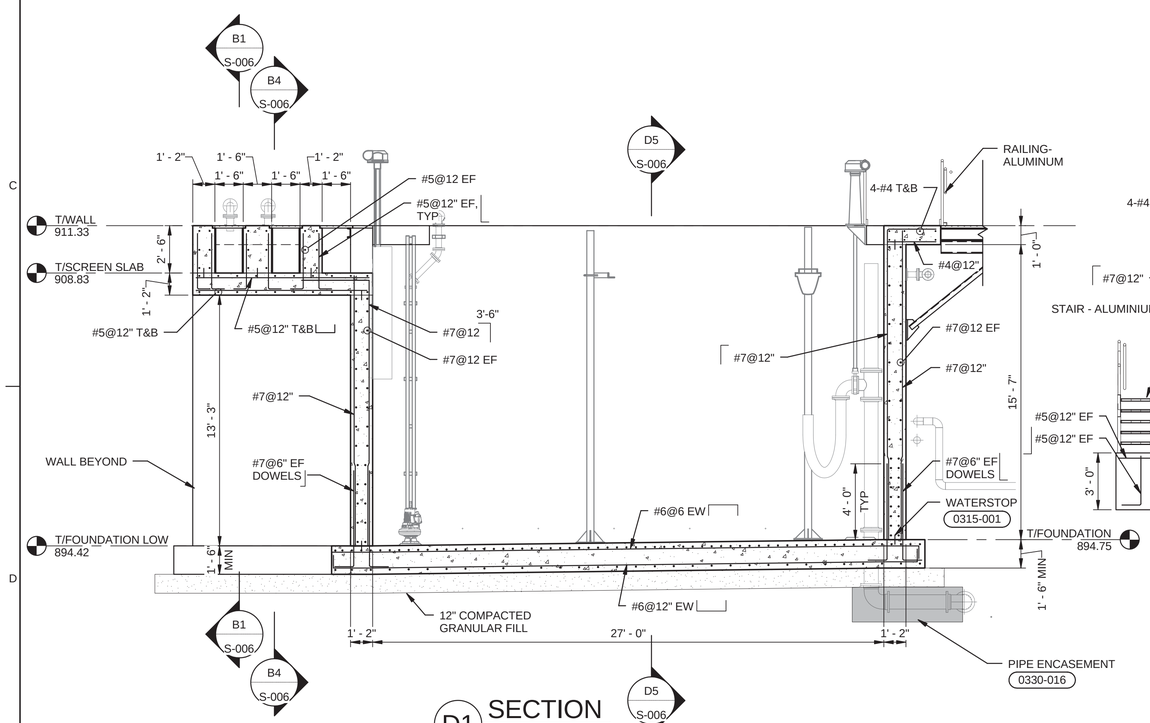

D1 SECTION
1/4" = 1'-0"
S-005

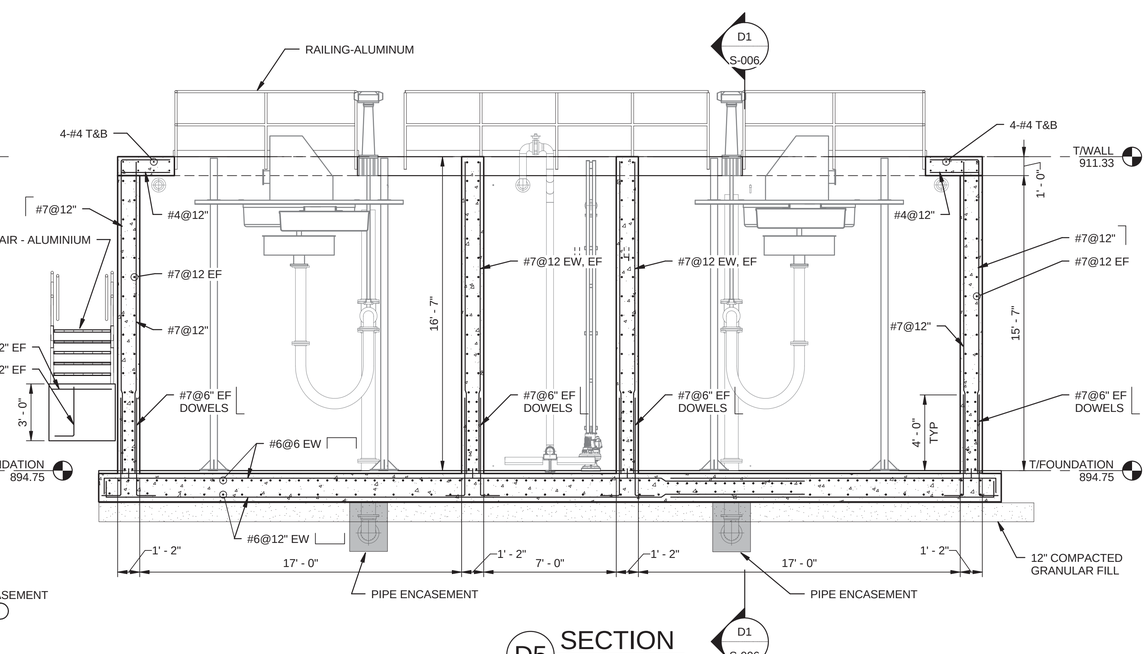

D5 SECTION
1/4" = 1'-0"
S-005

STATE OF OHIO
ARNOL GILLUM
E-65157
REGISTERED PROFESSIONAL ENGINEER
3-31-17

NO.	DATE	REVISION	BY	APVD
DSGN	AJ GILLUM	DR J. BRADLEY	CHK D LANGE	APVD AJ GILLUM

©CH2M HILL 2014. ALL RIGHTS RESERVED.

Clermont County

VILLAGE OF NEWTONSVILLE
WASTEWATER TREATMENT PLANT & COLLECTION SYSTEM - PART A
CLERMONT COUNTY WATER RESOURCES DEPARTMENT, CLERMONT COUNTY, OHIO

REUSE OF DOCUMENTS: THIS DOCUMENT, AND THE IDEAS AND DESIGNS INCORPORATED HEREIN, AS AN INSTRUMENT OF PROFESSIONAL SERVICE, IS THE PROPERTY OF CH2M HILL AND IS NOT TO BE USED, IN WHOLE OR IN PART, FOR ANY OTHER PROJECT WITHOUT THE WRITTEN AUTHORIZATION OF CH2M HILL.

ch2m

STRUCTURAL

SCREEN/SEQUENCING BATCH REACTOR SECTIONS AND DETAILS

As indicated

VERIFY SCALE

BAR IS ONE INCH ON ORIGINAL DRAWING
0 1"

DATE	2017-03-31
PROJ	665163
DWG	S-006
SHEET	27 of 91

BID READY

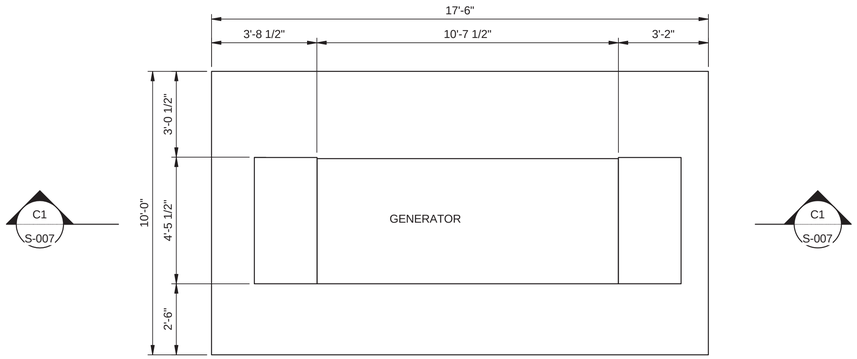

GENERATOR PAD TOP PLAN

3/8" = 1'-0"

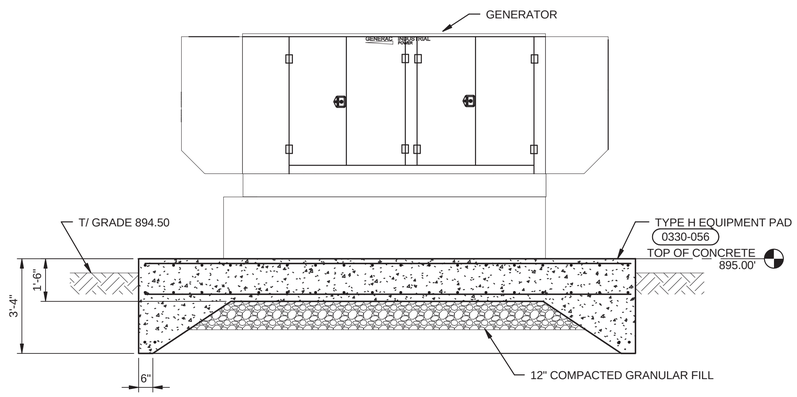

C1 SECTION

3/8" = 1'-0"

S-007

GENERAL SHEET NOTES:

A. REFER TO SHEETS S-001 AND S-002 FOR STRUCTURAL GENERAL NOTES.

B. REFER TO CIVIL SITE DRAWINGS FOR EQUIPMENT PAD LOCATION AND SITE ELEVATIONS.

C. REFER TO ELECTRICAL DRAWINGS FOR GENERATOR LOCATION AND ADDITIONAL INFORMATION.

D. ATTACHMENT TO EQUIPMENT PAD BY GENERATOR MANUFACTURER.

STATE OF OHIO
ARNOL GILLUM
E-65157
REGISTERED PROFESSIONAL ENGINEER
3-31-17

NO.	DATE	REVISION	BY	APVD

DSGN	DR	CHK	APVD
AJ GILLUM	J BRADLEY	D LANGE	AJ GILLUM

©CH2M HILL 2014. ALL RIGHTS RESERVED.

REUSE OF DOCUMENTS: THIS DOCUMENT, AND THE IDEAS AND DESIGNS INCORPORATED HEREIN, AS AN INSTRUMENT OF PROFESSIONAL SERVICE, IS THE PROPERTY OF CH2M HILL AND IS NOT TO BE USED, IN WHOLE OR IN PART, FOR ANY OTHER PROJECT WITHOUT THE WRITTEN AUTHORIZATION OF CH2M HILL.

Clermont County

VILLAGE OF NEW/TONSVILLE
WASTEWATER TREATMENT PLANT & COLLECTION SYSTEM - PART A
CLERMOUNT COUNTY WATER RESOURCES DEPARTMENT, CLERMONT COUNTY, OHIO

STRUCTURAL

MISCELLANEOUS STRUCTURES

3/8" = 1'-0"

VERIFY SCALE

BAR IS ONE INCH ON ORIGINAL DRAWING
0 1"

DATE	2017-03-31
PROJ	665163
DWG	S-007
SHEET	28 of 91

BID READY

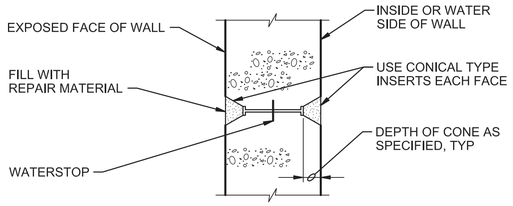

NOTE:

THE SPACING OF FORM TIES ON EXPOSED PORTIONS OF WALLS SHALL BE APPROXIMATELY EQUAL HORIZONTALLY AND VERTICALLY AND SHALL BE UNIFORM IN EACH DIRECTION.

FORM SNAP-TIE HOLE

NTS

0310-051

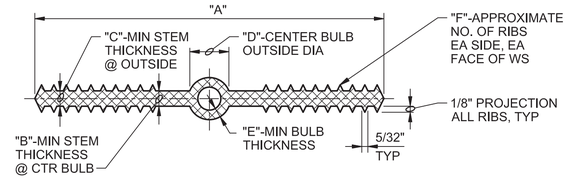

SIZE	"A"	"B"	"C"	"D"	"E"	"F"
4"x3/16"	4"	3/16"	3/16"	3/4"	1/4"	4
6"x3/8"	6"	3/8"	3/8"	7/8"	1/4"	6
9"x3/8"	9"	3/8"	3/8"	1"	1/4"	8

NOTES:

1. NON-ROUND CENTER BULBS SHALL HAVE A MINIMUM OUTSIDE DIMENSION OF 'D'.
2. SEE SPLICE DETAIL 0315-011
3. BULB TYPE WATERSTOP SHOWN IS REQUIRED FOR EXPANSION AND CONTROL JOINTS. SIMILAR WATERSTOPS WITHOUT CENTER BULB MAY BE SUBSTITUTED AT CONSTRUCTION JOINTS.
4. USE 6 INCH WATERSTOPS IN ALL CONSTRUCTION JOINTS UNLESS SPECIFICALLY SHOWN OTHERWISE.

PLASTIC WATERSTOP

NTS

0315-001

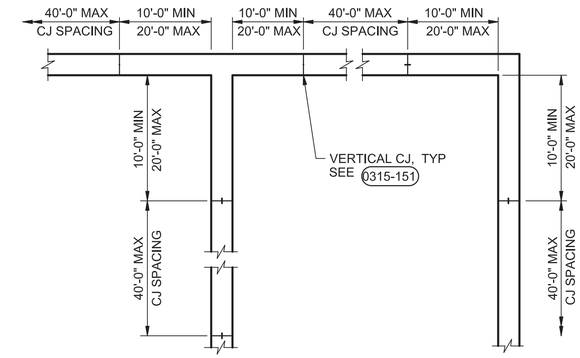

PLAN

NOTES:

1. COORDINATE CONSTRUCTION JOINT LOCATIONS AND TIME BETWEEN CONCRETE POURS WITH SPECIFICATION 03 30 00.
2. LOCATE WALL CONSTRUCTION JOINTS AS SHOWN, UNLESS INDICATED OTHERWISE.

WALL CONSTRUCTION JOINT SPACING

NTS

0315-131

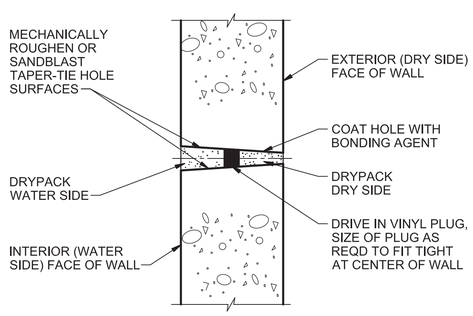

NOTE:

MINIMUM HOLE DIAMETER AT EXTERIOR FACE = 1". TAPER HOLE SO THAT MINIMUM HOLE DIAMETER AT INTERIOR FACE = 1 1/4"

CONSTRUCTION STEPS:

1. SANDBLAST OR MECHANICALLY ROUGHEN WITH ELECTRIC EQUIPMENT.
2. DRIVE IN VINYL PLUG.
3. COAT HOLE ON DRY SIDE OF PLUG AND WHILE BONDING AGENT IS TACKY, DRYPACK.
4. COAT HOLE ON WATER SIDE OF PLUG AND WHILE BONDING AGENT IS TACKY, DRYPACK.
5. USE CATEGORY II, NON-SHRINK GROUT AS SPECIFIED.

ALTERNATE FORM TIE-THROUGH BOLT

NTS

0310-052

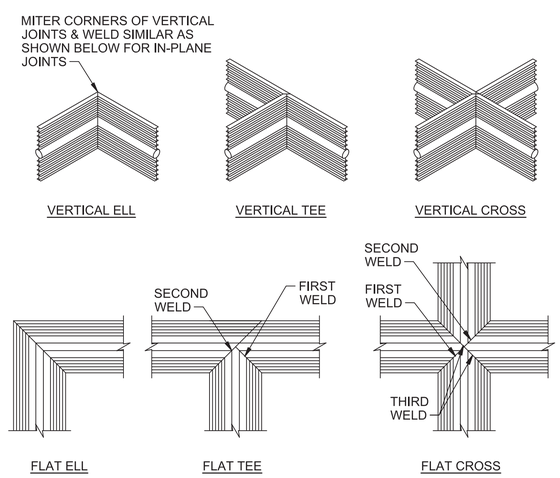

NOTE:

ALL WELDS SHALL BE PER WATERSTOP MANUFACTURER'S RECOMMENDATIONS.

WATERSTOP JOINTS

NTS

0315-011

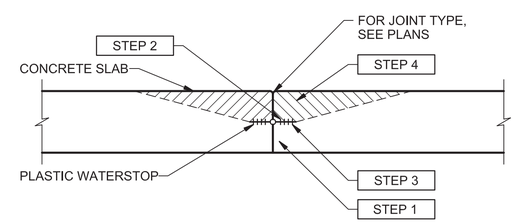

NOTES:

PLACEMENT SEQUENCE SHOWN REQUIRED ON BOTH SIDES OF JOINTS, IN ALL CONCRETE SLAB AND FOOTING POURS WITH HORIZONTALLY PLACED PLASTIC WATERSTOPS.

STEP 1

PLACE CONCRETE BELOW WATERSTOP FIRST, REMOVE ALL AIR VOIDS BY VIBRATING THOROUGHLY.

STEP 2

TO CONFIRM THERE ARE NO AIR VOIDS, LIFT WATERSTOP. A CONTINUOUS IMPRESSION OF THE WATERSTOP, INCLUDING EDGE OF BULB, SHOULD BE VISIBLE IN THE FRESH CONCRETE. CONTINUE THIS PROCEDURE ALONG THE ENTIRE POURED JOINT, END TO END. IF A CONTINUOUS IMPRESSION IS CONFIRMED, PROCEED WITH STEP 4. IF A VOID LARGER THAN 6mm IN DIAMETER IS PRESENT ANYWHERE IN THE WATERSTOP IMPRESSION, PROCEED WITH STEP 3.

STEP 3

IF A VOID LARGER THAN 6mm IN DIAMETER IS PRESENT IN THE WATERSTOP IMPRESSION, ADDITIONAL CONCRETE SHALL BE PLACED UNDER THE WATERSTOP, VIBRATED, AND STEP 2 REPEATED.

STEP 4

FINISH PLACING CONCRETE ABOVE THE WATERSTOP TO TOP OF SLAB.

CONCRETE PLACEMENT SEQUENCE

NTS

0315-133

STATE OF OHIO · ARNOL GILLUM · E-65157 · REGISTERED · PROFESSIONAL ENGINEER · 2-31-17

NO.	DATE	REVISION	BY	APVD

DSGN AJ GILLUM | DR J BRADLEY | CHK D LANGE | APVD AJ GILLUM

VILLAGE OF NEWTONSVILLE
WASTEWATER TREATMENT PLANT & COLLECTION SYSTEM - PART A
CLERMONT COUNTY WATER RESOURCES DEPARTMENT, CLERMONT COUNTY, OHIO

STRUCTURAL
TYPICAL DETAILS 1

NTS
VERIFY SCALE
BAR IS ONE INCH ON ORIGINAL DRAWING.
0 1"

DATE	2017-03-31
PROJ	665163
DWG	S-008
SHEET	29 of 91

BID READY

REUSE OF DOCUMENTS: THIS DOCUMENT, AND THE IDEAS AND DESIGNS INCORPORATED HEREIN, AS AN INSTRUMENT OF PROFESSIONAL SERVICE, IS THE PROPERTY OF CH2M HILL AND IS NOT TO BE USED, IN WHOLE OR IN PART, FOR ANY OTHER PROJECT WITHOUT THE WRITTEN AUTHORIZATION OF CH2M HILL.
©CH2M HILL 2015. ALL RIGHTS RESERVED.

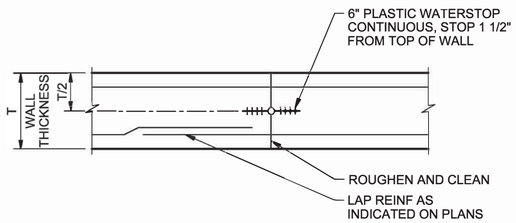

PLAN

NOTES:

1. ALL REINFORCING CONTINUOUS ACROSS JOINT.
2. FOR LOCATIONS, SEE 0315-131

WALL VERTICAL CONSTRUCTION JOINT

NTS

0315-151

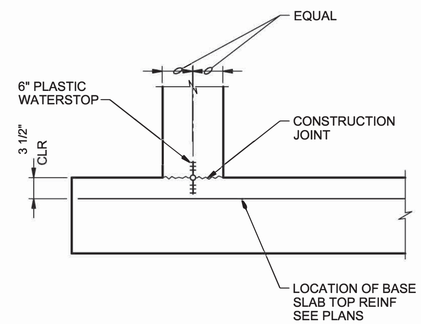

NOTES:

1. FOR WALLS WITH SINGLE MAT OF REINFORCING LOCATE WATERSTOP ON LIQUID FACE, 1" CLEAR OF REINFORCEMENT.
2. SECURE WATERSTOP IN-PLACE AS SPECIFIED.

WALL BASE CONSTRUCTION JOINT

NTS

0315-154

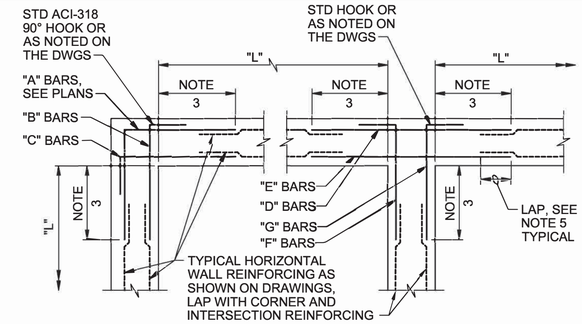

DOUBLE REINFORCING MAT

NOTES:

1. TYPICAL HORIZONTAL WALL CORNER AND INTERSECTION REINFORCING LAYOUT IS SHOWN TO AVOID CONGESTION AND PERMIT PROPER PLACEMENT, FOR SIZE AND SPACING SEE PLANS. ALL HORIZONTAL REINFORCING AT CORNERS AND INTERSECTIONS SHALL BE FABRICATED AND INSTALLED WITH SPLICES LOCATED WHERE SHOWN REGARDLESS OF BAR SIZE AND SPACING.
2. WHERE THE CORNER OR INTERSECTION REINFORCING SIZE AND SPACING IS NOT SHOWN, NOTED OR TABULATED ON THE PLANS, THE SIZE AND SPACING SHALL BE THE SAME AS THE WALL HORIZONTAL REINFORCING SHOWN ON THE WALL SECTIONS OR AS NOTED FOR THE REINFORCING BETWEEN THE CORNERS OR INTERSECTIONS
3. EXCEPT WHERE OTHERWISE SHOWN ON THE DRAWINGS, THE LENGTH INDICATED AS "NOTE 3" SHALL BE THE LESSER OF L/4, 10 FEET, OR 1.0 TIMES THE HEIGHT OF THE WALL, EXCEPT THAT IN NO CASE SHALL IT BE LESS THAN 2 FEET.
4. L = LENGTH OF WALL PARALLEL TO THE BAR LENGTH IN QUESTION.
5. EXCEPT WHERE OTHERWISE SHOWN ON THE DRAWINGS, THE LENGTH INDICATED AS "NOTE 5" SHALL BE EQUAL TO ONE "LAP LENGTH" AS REQUIRED BY THE GENERAL STRUCTURAL NOTES. USE THE LAP LENGTH AS REQUIRED FOR THE SMALLER OF THE TWO REINFORCING BARS BEING SPLICED.
6. UNLESS OTHERWISE NOTED, "B" AND "C" BARS ARE THE SAME SIZE AND SPACING AND "F" AND "G" BARS ARE THE SAME SIZE AND SPACING.

TYPICAL WALL CORNER AND INTERSECTION REINFORCING

NTS

0330-003

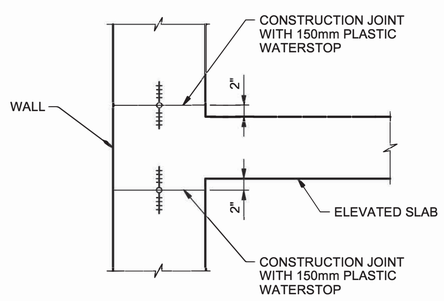

WALL CONSTRUCTION JOINT AT ELEVATED SLAB

NTS

0315-152

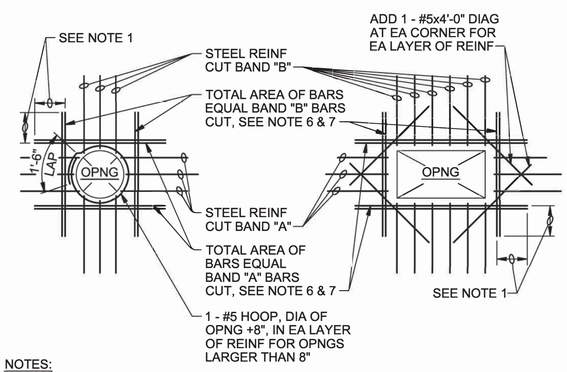

NOTES:

1. PROVIDE MINIMUM LAP, SEE GENERAL STRUCTURAL NOTES.
2. TYPICAL FOR ALL OPENINGS IN CONCRETE WALLS OF BELOW GRADE AND HYDRAULIC STRUCTURES AND ALL STRUCTURAL CONCRETE SLABS UNLESS INDICATED OTHERWISE ON PLANS.
3. DO NOT WELD REINFORCEMENT TO PIPE SLEEVES AND INSERTS.
4. PROVIDE A MINIMUM OF 2 "A" BARS AND 2 "B" BARS EACH SIDE OF OPENING (1 EACH FACE), INCLUDING DOWELS AND CORNER BARS, TYPICAL.
5. FOR OPENINGS LARGER THAN 8'-0", REINFORCE SAME AS FOR 8'-0" OPENINGS.
6. SPACE AT 3 BAR DIAMETERS (OR 3" MINIMUM) ON CENTER. LOCATE HALF OF TOTAL AREA ON EACH SIDE OF OPENING.
7. AT OPENINGS WITHIN 12" OF AN INTERSECTING WALL OR SLAB, PROVIDE ONLY THE EXTRA REINFORCEMENT WHICH WILL FIT, AT THE BAR SPACING IN NOTE 6.

OPENING REINFORCING

NTS

0330-001

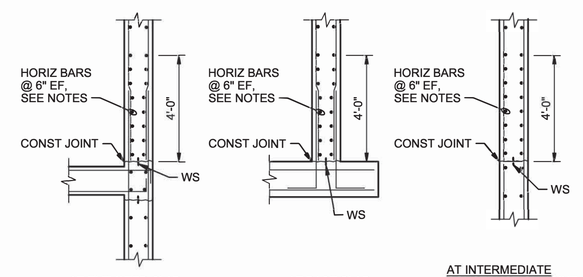

AT ELEVATED SLAB | AT BASE SLAB | AT INTERMEDIATE CONSTRUCTION JOINT

NOTES:

1. PROVIDE HORIZONTAL BARS AT 6" SPACING EACH FACE IN THE FIRST 4'-0" ABOVE ALL HORIZONTAL WALL CONSTRUCTION JOINTS IN LIQUID CONTAINING AND BELOW-GRADE STRUCTURES. WHERE TYPICAL WALL HORIZONTAL BARS ARE AT 12" SPACING, PROVIDE ADDITIONAL BARS FOR 6" SPACING.
2. HORIZONTAL BAR SIZE FOR THE 4'-0" ZONE SHALL BE THE TYPICAL WALL HORIZONTAL BAR SIZE SHOWN ON THE DRAWINGS OR THE MINIMUM BAR SIZE IN THE TABLE BELOW, WHICHEVER IS GREATER.

WALL THICKNESS (INCHES)	MINIMUM BAR SIZE
10	#5
12, 14	#6
16, 18, 20	#7
≥22	#8

3. PROVIDE CORNER BARS AT 6" SPACING EACH FACE TO LAP WITH THE BARS SHOWN ABOVE, SEE 0330-003.

REINFORCING AT HORIZONTAL CONSTRUCTION JOINT

NTS

0330-004

STATE OF OHIO ARNOL GILLUM E-65157 REGISTERED PROFESSIONAL ENGINEER 3-31-17

NO.	DATE	REVISION	BY	APVD

DSGN AJ GILLUM | DR J BRADLEY | CHK D LANGE | APVD AJ GILLUM

VILLAGE OF NEWTONSVILLE
WASTEWATER TREATMENT PLANT & COLLECTION SYSTEM - PART A
CLERMONT COUNTY WATER RESOURCES DEPARTMENT, CLERMONT COUNTY, OHIO

STRUCTURAL

TYPICAL DETAILS 2

NTS
VERIFY SCALE
BAR IS ONE INCH ON ORIGINAL DRAWING. 0 1"

DATE	2017-03-31
PROJ	665163
DWG	S-009
SHEET	30 of 91

BID READY

©CH2M HILL 2015. ALL RIGHTS RESERVED.
REUSE OF DOCUMENTS: THIS DOCUMENT, AND THE IDEAS AND DESIGNS INCORPORATED HEREIN, AS AN INSTRUMENT OF PROFESSIONAL SERVICE, IS THE PROPERTY OF CH2M HILL AND IS NOT TO BE USED, IN WHOLE OR IN PART, FOR ANY OTHER PROJECT WITHOUT THE WRITTEN AUTHORIZATION OF CH2M HILL.

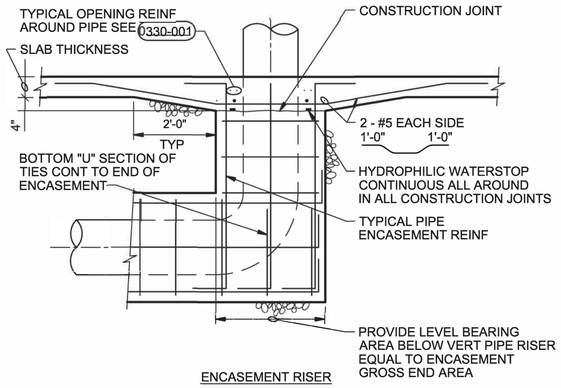

ENCASEMENT RISER

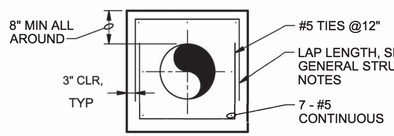

SECTION

NOTES:

1. SECTION APPLIES TO PIPES W/ DIAMETERS 18" AND SMALLER. 0330-017
2. WHEN PIPE ENCASEMENT IS CLOSER THAN 4" TO SLAB ABOVE, TIE SLAB & ENCASEMENT TOGETHER. SEE 0330-018

PIPE ENCASEMENT

NTS

0330-016

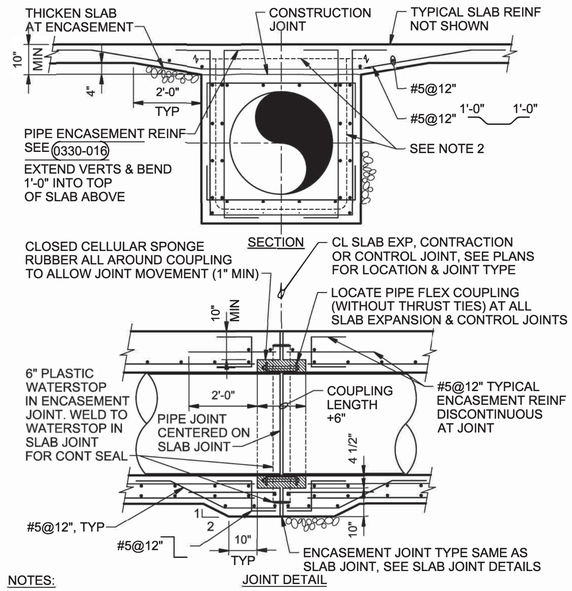

JOINT DETAIL

NOTES:

1. TIE PIPE ENCASEMENT TO SLAB AS SHOWN WHEN DISTANCE BETWEEN PIPE ENCASEMENT AND BOTTOM OF SLAB IS LESS THAN 4".
2. 6" PLASTIC WS IN ENCASEMENT JOINTS. WELD TO WS IN SLAB JOINTS.

PIPE ENCASEMENT AT SLAB

NTS

0330-018

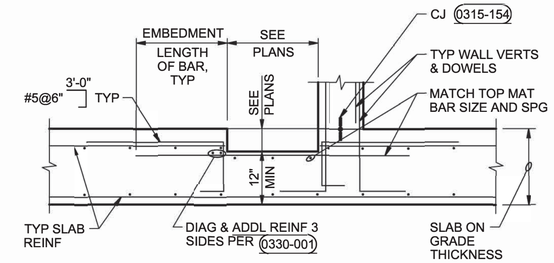

TYPICAL SLAB - TYPE A

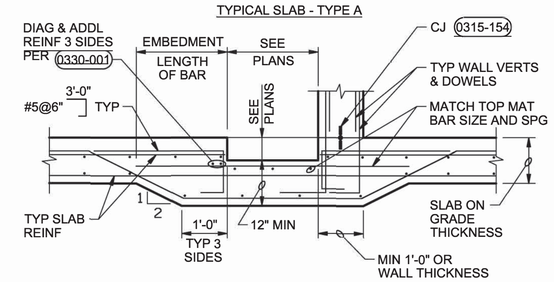

THICKENED SLAB - TYPE B

NOTES:

1. REBAR LOCATION SHALL ACCOMMODATE GRATING CONNECTIONS WHERE REQUIRED. SEE DETAIL 0553-001

IN-SLAB SUMP REINFORCING

NTS

0330-044

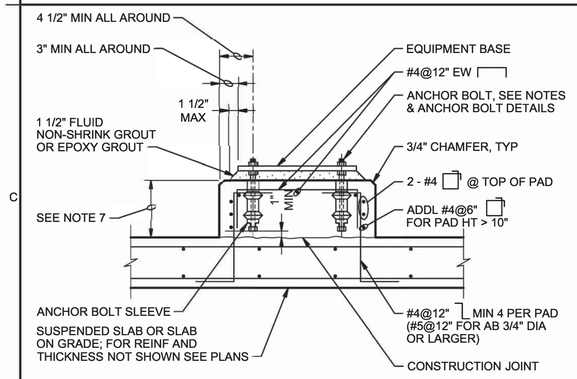

TYPE A

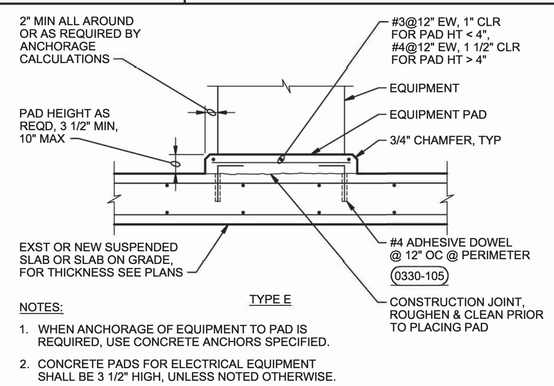

NOTES:

1. WHEN ANCHORAGE OF EQUIPMENT TO PAD IS REQUIRED, USE CONCRETE ANCHORS SPECIFIED.
2. CONCRETE PADS FOR ELECTRICAL EQUIPMENT SHALL BE 3 1/2" HIGH, UNLESS NOTED OTHERWISE.

TYPE E

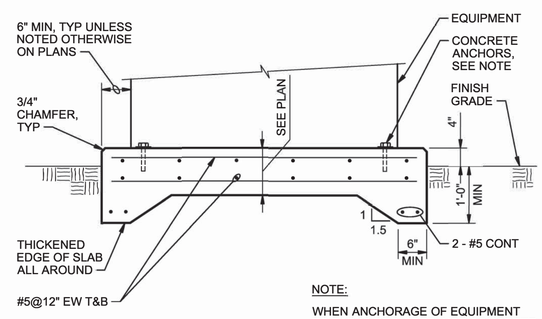

NOTE:

WHEN ANCHORAGE OF EQUIPMENT TO PAD IS REQUIRED, USE CONCRETE ANCHORS SPECIFIED.

TYPE H

NOTES:

1. PAD SIZE SHALL BE MINIMUM INDICATED OR AS SHOWN ON THE PLANS OR AS INDICATED BY THE MANUFACTURER AND APPROVED BY THE ENGINEER.
2. THE SIZE, NUMBER, TYPE, LOCATION, AND THREAD PROJECTION OF THE ANCHOR BOLTS SHALL BE DETERMINED BY THE EQUIPMENT MANUFACTURER AND AS APPROVED BY THE ENGINEER. ANCHOR BOLTS SHALL BE HELD IN POSITION WITH A TEMPLATE OR OTHER ACCEPTABLE MEANS, MATCHING THE BASE PLATE, WHILE PAD IS BEING PLACED.
3. ANCHOR BOLT SLEEVES SHALL BE USED TO PROVIDE MINIMUM ANCHOR BOLT MOVEMENT OF 1/2" IN ALL HORIZONTAL DIRECTIONS. THE MINIMUM SLEEVE LENGTH SHALL BE 8 TIMES THE BOLT DIAMETER.
4. ANCHOR BOLT SLEEVES SHALL HAVE A MINIMUM INTERNAL DIAMETER 1" GREATER THAN BOLT DIAMETER AND A MAXIMUM INTERNAL DIAMETER 3" GREATER THAN ANCHOR BOLT DIAMETER. SLEEVES SHALL BE FILLED WITH NON-SHRINK GROUT AFTER BOLTS ARE ALIGNED. SEE 0330-057.
5. EQUIPMENT BASES SHALL BE INSTALLED LEVEL UNLESS INDICATED OTHERWISE.
6. WEDGES, SHIMS, OR LEVELING NUTS SHALL BE USED TO SUPPORT THE BASE WHILE THE GROUT IS PLACED. WEDGES OR SHIMS SHALL BE REMOVED AFTER GROUT IS SET AND PACK VOID WITH GROUT.
7. HEIGHT OF PADS SHALL BE MINIMUM REQUIRED FOR ANCHOR BOLT CLEARANCE TO KEEP ANCHOR BOLT ABOVE SUPPORTING SLAB (SEE TABLE BELOW).
8. AT CONTRACTOR'S OPTION, CONCRETE ANCHORS MAY BE USED IN LIEU OF CAST-IN-PLACE ANCHOR BOLTS FOR EQUIPMENT ANCHOR BOLTS LESS THAN 3/4" DIAMETER WHEN APPROVED BY THE EQUIPMENT MANUFACTURER AND APPROVED BY THE ENGINEER. ANCHORS SHALL BE INSTALLED WITH 4" MINIMUM EDGE DISTANCE IN EACH DIRECTION.

AB DIA (IN.)	1/2	5/8	3/4	7/8	1	1 1/4	1 3/8	1 1/2	1 3/4	2
MIN PAD HT (IN.)	7	8 1/2	10	11	12 1/2	15	16 1/2	18	21	24

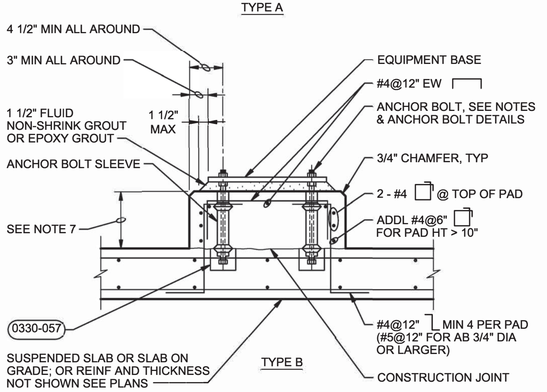

TYPE B

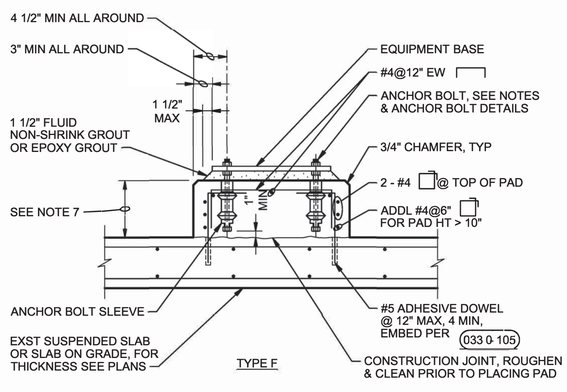

TYPE F

CONCRETE EQUIPMENT PAD

NTS

0330-056

STATE OF OHIO ARNOL GILLUM E-65157 REGISTERED PROFESSIONAL ENGINEER 2-31-17

NO.	DATE	REVISION	BY	APVD
DSGN	AJ GILLUM	DR J BRADLEY	CHK D LANGE	APVD AJ GILLUM

©CH2M HILL 2015. ALL RIGHTS RESERVED.
REUSE OF DOCUMENTS: THIS DOCUMENT, AND THE IDEAS AND DESIGNS INCORPORATED HEREIN, AS AN INSTRUMENT OF PROFESSIONAL SERVICE, IS THE PROPERTY OF CH2M HILL AND IS NOT TO BE USED, IN WHOLE OR IN PART, FOR ANY OTHER PROJECT WITHOUT THE WRITTEN AUTHORIZATION OF CH2M HILL.

VILLAGE OF NEWTONSVILLE
WASTEWATER TREATMENT PLANT & COLLECTION SYSTEM - PART A
CLERMONT COUNTY WATER RESOURCES DEPARTMENT, CLERMONT COUNTY, OHIO

STRUCTURAL
TYPICAL DETAILS 3

NTS
VERIFY SCALE
BAR IS ONE INCH ON ORIGINAL DRAWING.
0 1"

DATE	2017-03-31
PROJ	665163
DWG	S-010
SHEET	31 of 91

BID READY

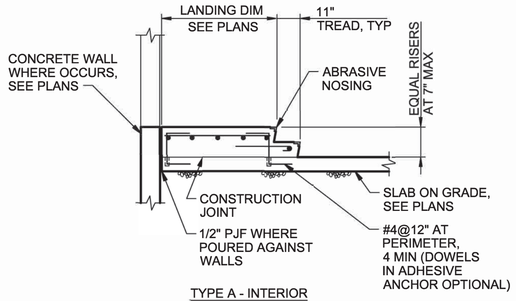

TYPE A - INTERIOR

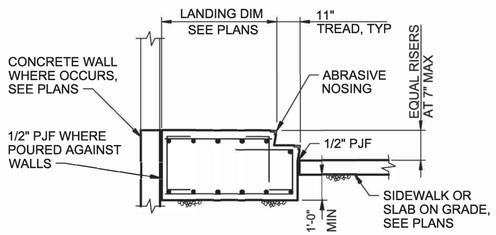

TYPE B - EXTERIOR

NOTE:

REINFORCE WITH #5 @12",
UNLESS NOTED OTHERWISE.

CONCRETE STAIR - ON GRADE

NTS

0330-050

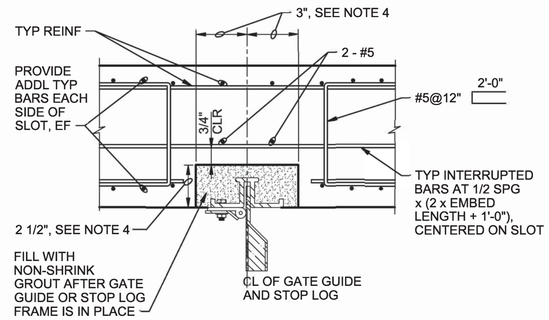

PLAN

(BASE SLAB SECTION SIMILAR)

FLUSH BLOCKOUT

NOTES:

1. FLUSH BLOCKOUT TYPICAL UNLESS OTHERWISE NOTED OR SHOWN ON PLANS.
2. REINFORCEMENT DETAILS ARE FOR BLOCKOUT AT STRAIGHT RUN WALL. MODIFY TO FIT CONDITIONS OF WALL SHOWN ON PLANS.
3. WALL BLOCKOUT SHOWN. BLOCKOUT CONTINUES THROUGH CHANNEL BASE SLAB. REINFORCE BASE SLAB SIMILARLY.
4. VERIFY WITH MANUFACTURER AND COORDINATE GATE GUIDES.

BLACKOUT FOR STOP LOG OR GATE GUIDE

NTS

0330-076

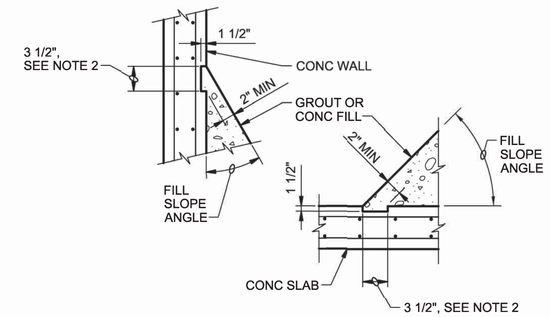

NOTES:

1. PROVIDE KEY FOR ALL FILL WHERE FILL SLOPE ANGLE TO WALL OR SLAB IS LESS THAN 45 DEGREES.
2. LENGTHEN 3 1/2" BLOCKOUT AS REQUIRED TO MAINTAIN 2" MINIMUM THICKNESS OF GROUT OR CONCRETE FILL.

CONC OR GROUT FILL KEY

NTS

0330-078

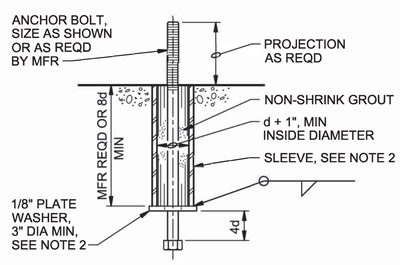

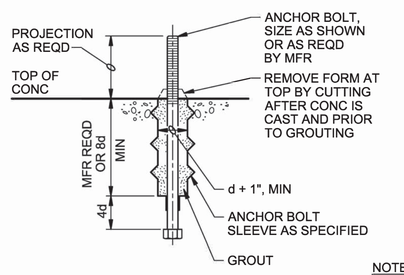

MACHINERY ANCHOR BOLT DETAIL

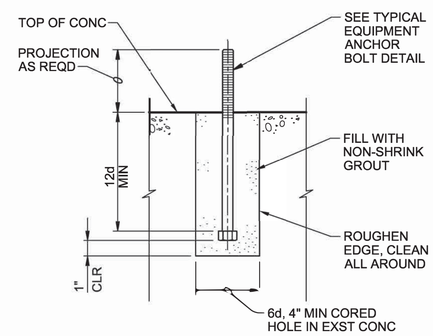

ANCHOR BOLT RETROFIT

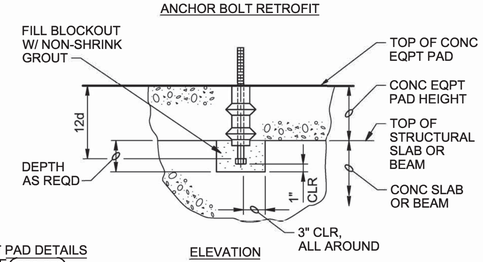

ELEVATION

ANCHOR BOLT BLOCKOUT

NOTES:

1. FOR CONCRETE EQUIPMENT PAD DETAILS AND NOTES NOT SHOWN SEE 0330-056
2. MATERIAL TO MATCH BOLT.

ANCHOR BOLT DETAILS

NTS

0330-057

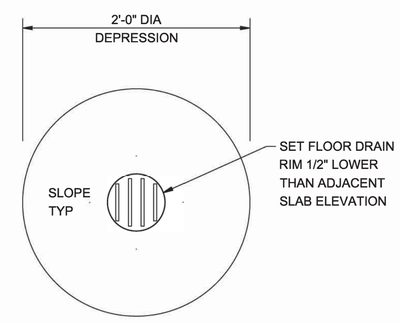

FLOOR DRAIN

NTS

0330-082

STATE OF OHIO
ARNOL GILLUM
E-65157
REGISTERED
PROFESSIONAL ENGINEER
2-31-17

NO.	DATE	REVISION	BY	APVD
DSGN	AJ GILLUM	DR J BRADLEY	CHK D LANGE	APVD AJ GILLUM

VILLAGE OF NEWTONSVILLE
WASTEWATER TREATMENT PLANT &
COLLECTION SYSTEM - PART A
CLERMONT COUNTY WATER RESOURCES
DEPARTMENT, CLERMONT COUNTY, OHIO

STRUCTURAL

TYPICAL DETAILS 4

NTS

VERIFY SCALE

BAR IS ONE INCH ON ORIGINAL DRAWING.
0 1"

DATE	2017-03-31
PROJ	665163
DWG	S-011
SHEET	32 of 91

BID READY

REUSE OF DOCUMENTS: THIS DOCUMENT, AND THE IDEAS AND DESIGNS INCORPORATED HEREIN, AS AN INSTRUMENT OF PROFESSIONAL SERVICE, IS THE PROPERTY OF CH2M HILL AND IS NOT TO BE USED, IN WHOLE OR IN PART, FOR ANY OTHER PROJECT WITHOUT THE WRITTEN AUTHORIZATION OF CH2M HILL.

©CH2M HILL 2015. ALL RIGHTS RESERVED.

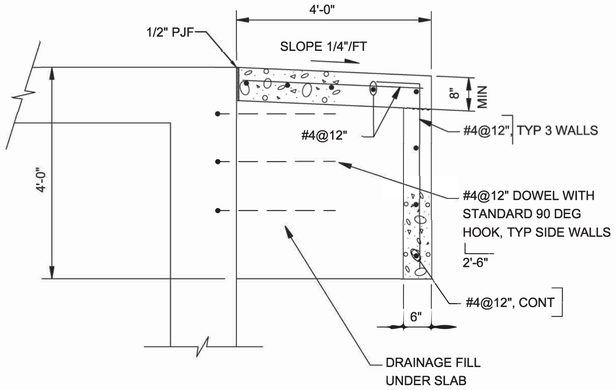

CONCRETE STOOP DETAILS

NTS

0330-100

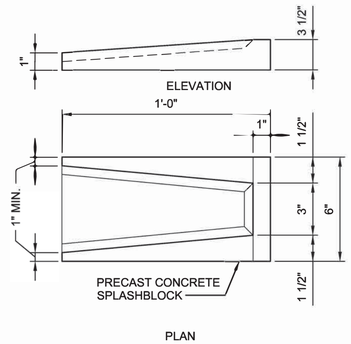

SPLASHBLOCK

NTS

0340-095

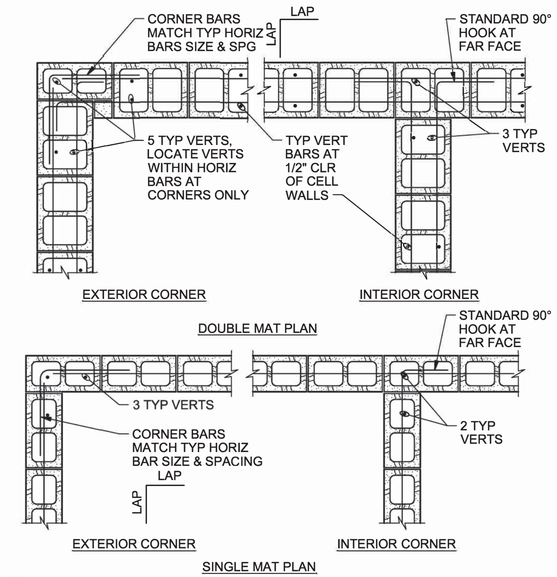

NOTES:

1. LAP=48 BAR DIAMETERS OR 2'-0" MINIMUM UNLESS OTHERWISE NOTED.
2. PROVIDE A STANDARD 90° HOOK EACH END ON ANY HORIZONTAL BAR BETWEEN OPENINGS, CONTROL JOINTS, OR CORNERS LESS THAN 6'-0" IN LENGTH.

CMU WALL CORNERS (SINGLE & DOUBLE MAT)

NTS

0422-001

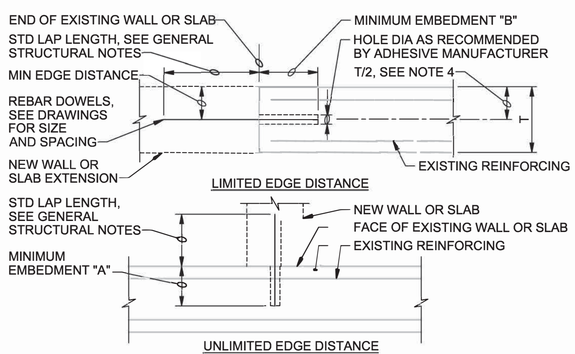

DOWEL SIZE	MINIMUM EDGE DIST	MINIMUM EMBEDMENT A	MINIMUM EMBEDMENT B
#3	2 1/2"	5"	8"
#4	3 1/2"	7"	11"
#5	4"	8"	13"
#6	5"	10 1/2"	16"
#7	6"	12 1/2"	20"
#8	7"	14"	22"
#9	7 1/2"	15"	24"

NOTES:

1. CONFORM TO THE REQUIREMENTS OF SPECIFICATION SECTION 03 30 00 CAST-IN-PLACE CONCRETE.
2. FOLLOW ADHESIVE MANUFACTURER'S INSTRUCTIONS FOR INSTALLATION.
3. USE MINIMUM EMBEDMENTS SHOWN, EXCEPT USE MANUFACTURER'S MINIMUM RECOMMENDED EMBEDMENT IF GREATER.
4. LOCATE DOWELS CENTERED IN WALL OR SLAB UNLESS OTHERWISE NOTED ON DRAWINGS. WHERE 2 ROWS OF DOWELS INDICATED, STAGGER SPACING & LOCATE ALTERNATING DOWELS AT MINIMUM EDGE DISTANCE FROM OPPOSITE FACES.

ADHESIVE DOWEL

NTS

0330-105

CMU OPENING REINF SCHEDULE						
8" WALLS						
W	LINTEL DEPTH	STIRRUP SIZE, SPG	"A" BARS	"B" BARS	"C" BARS	JAMB WIDTH
≤2'-8"	8"	-	1	1	1	8"
>2'-8"≤4'-0"	16"	-	2	1	1	8"
>4'-0"≤6'-0"	24"	#3@8"	2	1	2	16"
>6'-0"≤8'-0"	32"	#3@16"	2	2	3	24"
>8'-0"≤10'-0"	48"	#3@24"	2	2	3	24"
12" WALLS						
W	LINTEL DEPTH	STIRRUP SIZE, SPG	"A" BARS	"B" BARS	"C" BARS	JAMB WIDTH
≤2'-8"	8"	-	2	2	2	8"
>2'-8"≤4'-0"	16"	-	2	2	2	8"
>4'-0"≤6'-0"	24"	#3@8"	2	2	4	16"
>6'-0"≤8'-0"	32"	#3@16"	2	2	6	24"
>8'-0"≤10'-0"	48"	#3@24"	2	2	6	24"

NOTES:

1. USE BAR QUANTITIES AND SIZES GIVEN IN LINTEL SCHEDULE UNLESS OTHERWISE NOTED ON THE DRAWINGS.
2. EXTEND "C" BARS 48 BAR DIAMETERS, BUT NOT LESS THAN 2'-0" BEYOND TOP AND BOTTOM OF OPENING EXCEPT THAT WHEN "H" OR "W" EXCEEDS 2'-0", "C" BARS SHALL EXTEND FULL HEIGHT. WHERE THERE IS LESS THAN 8'-0" BETWEEN ADJACENT OPENINGS, EXTEND REINFORCING CONTINUOUS TO 2'-8" BEYOND FURTHEST OPENING.
3. "A" AND "B" BARS SHALL EXTEND 48 BAR DIAMETERS, BUT NOT LESS THAN 2'-0" EACH SIDE OF THE OPENINGS.
4. FOR BAR SIZES, MATCH TYPICAL WALL REINFORCING AS SHOWN ON THE BUILDING WALL SECTIONS.
5. FOR LINTEL DEPTHS EQUAL TO OR GREATER THAN 48" PROVIDE ADDITIONAL LAYER OF HORIZONTAL REINFORCEMENT AT 12" FROM BOTTOM OF LINTEL. MATCH SIZE OF TYPICAL WALL HORIZONTAL REINFORCEMENT.

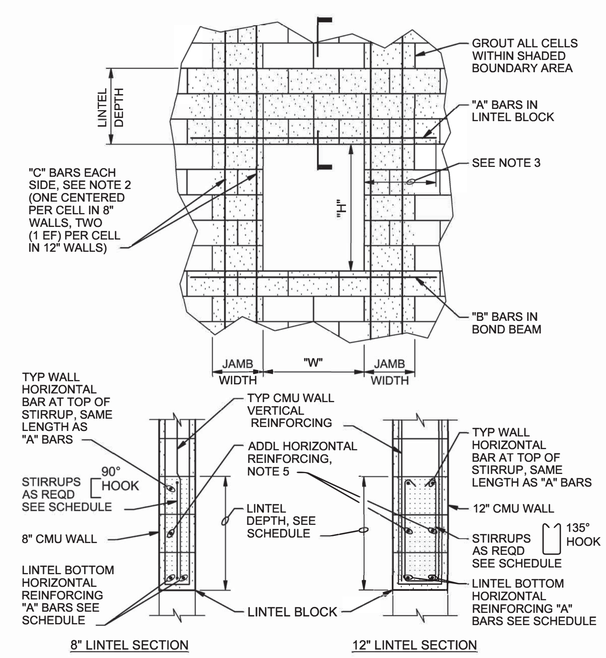

CMU OPENING REINFORCING

NTS

0442-003

STATE OF OHIO ARNOL GILLUM E-65157 REGISTERED PROFESSIONAL ENGINEER 2-31-17

NO.	DATE	REVISION	BY	APVD

DSGN AJ GILLUM | DR J BRADLEY | CHK D LANGE | APVD AJ GILLUM

REUSE OF DOCUMENTS: THIS DOCUMENT, AND THE IDEAS AND DESIGNS INCORPORATED HEREIN, AS AN INSTRUMENT OF PROFESSIONAL SERVICE, IS THE PROPERTY OF CH2M HILL AND IS NOT TO BE USED, IN WHOLE OR IN PART, FOR ANY OTHER PROJECT WITHOUT THE WRITTEN AUTHORIZATION OF CH2M HILL.

©CH2M HILL 2015. ALL RIGHTS RESERVED.

Clermont County

VILLAGE OF NEWTONSVILLE
WASTEWATER TREATMENT PLANT & COLLECTION SYSTEM - PART A
CLERMONT COUNTY WATER RESOURCES DEPARTMENT, CLERMONT COUNTY, OHIO

ch2m

STRUCTURAL

TYPICAL DETAILS 5

NTS

VERIFY SCALE

BAR IS ONE INCH ON ORIGINAL DRAWING.
0 1"

DATE	2017-03-31
PROJ	665163
DWG	S-012
SHEET	33 of 91

BID READY

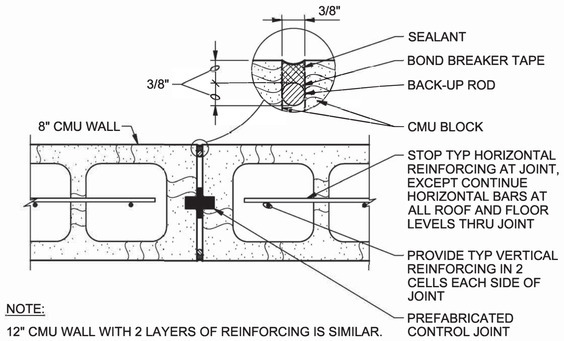

NOTE:
12" CMU WALL WITH 2 LAYERS OF REINFORCING IS SIMILAR.

CMU CONTROL JOINT
NTS

0442-031

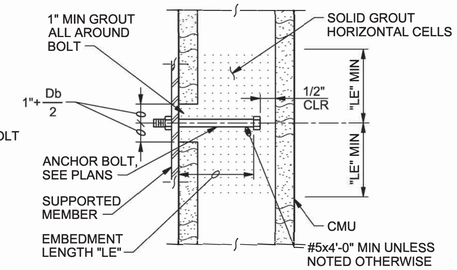

NOTE:
Db = DIAMETER OF BOLT

MASONRY ANCHOR BOLT
NTS

0442-046

ALUMINUM		
NOMINAL BEAM DEPTH, INCHES	ROWS OF BOLTS	LENGTH OF ANGLE
10	3	7 1/2"
7-8-9	2	5"
5-6	1	3"
4	1	2 3/4"

NOTES:
1. NUMBER OF ROWS IS EQUAL TO NUMBER OF BOLTS TO ENCLOSED WEB.
2. ALL FRAMING CONNECTIONS SHALL CONFORM TO SCHEDULE UNLESS DETAILED OTHERWISE ON FRAMING PLANS.

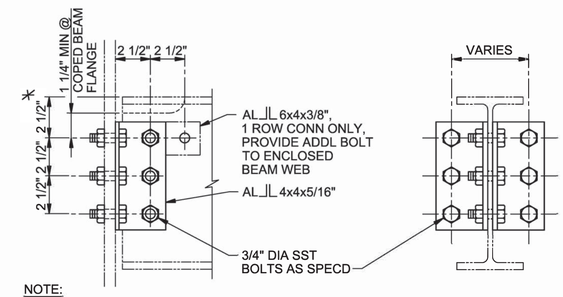

NOTE:
✳ 2 1/2" DIMENSION TYPICAL EXCEPT 2" FOR 4" BEAM.

TYPICAL BEAM CONNECTION - ALUMINUM
NTS

0514-020

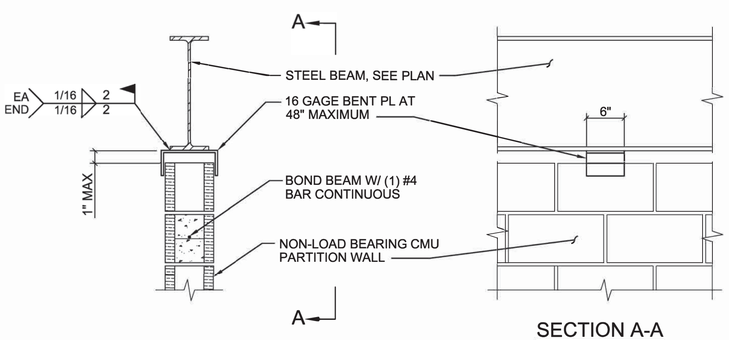

SECTION A-A

NON-BEARING CMU WALL TOP CONNECTION
NTS

0442-032

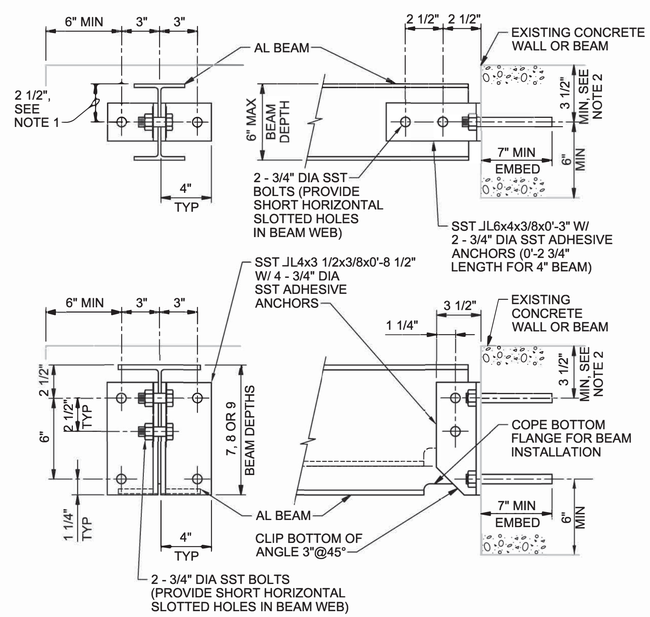

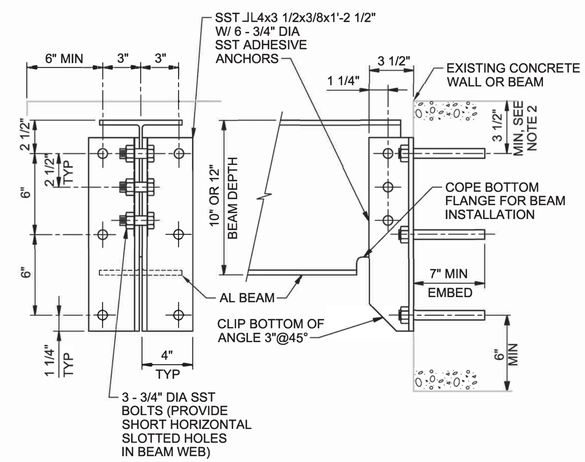

NOTES:
1. 2 1/2" DIMENSION TYPICAL EXCEPT 2" FOR 4" BEAMS.
2. DO NOT CUT EXISTING CONCRETE BEAM TOP REINFORCING DURING DRILL-IN ANCHOR INSTALLATION. FIELD LOCATE BEAM REINFORCING PRIOR TO FABRICATION. ADD LENGTH TO CLIP ANGLES AS REQUIRED TO LOWER ANCHORS TO CLEAR REINFORCING WHILE MAINTAINING SPACING AND EDGE DISTANCE AS SHOWN.
3. WHERE BOTH ENDS OF BEAM ARE ATTACHED TO A WALL, PROVIDE LONG HORIZONTALLY SLOTTED HOLES IN BEAM WEB AT ONE END. TIGHTEN NUTS SNUG TIGHT, BACK OFF 1/2 TURN, AND LOCK WITH DOUBLE NUT.

BEAM/WALL CONNECTION - ALUMINUM
NTS

0514-056

STATE OF OHIO
ARNOL GILLUM
E-65157
REGISTERED PROFESSIONAL ENGINEER
3-31-17

NO.	DATE	DR	CHK	APVD	BY	APVD
DSGN	AJ GILLUM	J BRADLEY	D LANGE	AJ GILLUM		

REVISION

©CH2M HILL 2015. ALL RIGHTS RESERVED.

REUSE OF DOCUMENTS: THIS DOCUMENT, AND THE IDEAS AND DESIGNS INCORPORATED HEREIN, AS AN INSTRUMENT OF PROFESSIONAL SERVICE, IS THE PROPERTY OF CH2M HILL AND IS NOT TO BE USED, IN WHOLE OR IN PART, FOR ANY OTHER PROJECT WITHOUT THE WRITTEN AUTHORIZATION OF CH2M HILL.

Clermont County

VILLAGE OF NEWTONSVILLE
WASTEWATER TREATMENT PLANT & COLLECTION SYSTEM - PART A
CLERMONT COUNTY WATER RESOURCES DEPARTMENT, CLERMONT COUNTY, OHIO

ch2m

STRUCTURAL

TYPICAL DETAILS 6

NTS
VERIFY SCALE
BAR IS ONE INCH ON ORIGINAL DRAWING.
0 1"

DATE	2017-03-31
PROJ	665163
DWG	S-013
SHEET	34 of 91

BID READY

NOTES:
1. PROVIDE PROTECTION FOR DISSIMILAR METALS AND CONCRETE AS SPECIFIED.
2. AMERICAN STANDARD C12x7.41 ALUMINUM STRINGERS TYPICAL EXCEPT WHERE OTHERWISE NOTED ON PLANS.
3. STAIR HANDRAIL NOT SHOWN.
4. STAIR MANUFACTURER TO COORDINATE BOLTED TREADS AND HANDRAIL CONNECTIONS.
5. ALL FASTENERS SHALL BE STAINLESS STEEL.
6. FIELD VERIFY DIMENSIONS AND ELEVATIONS PRIOR TO FABRICATION.
7. FOR RISER PLATE SEE PARTIAL RISER PLATE DETAIL UNLESS NOTED OTHERWISE. CLEARANCE BETWEEN TOP OF RISER PLATE AND BOTTOM OF TREAD TO BE 3 3/4" MAX. FOR STAIRS WITH PICKET HANDRAIL EXTEND RISER PLATE PER FULL RISER PLATE DETAIL.

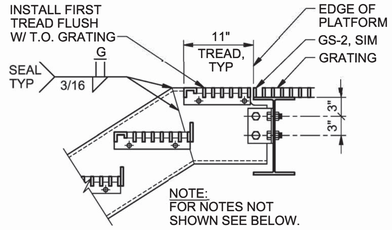

TOP CONNECTION - ALUMINUM

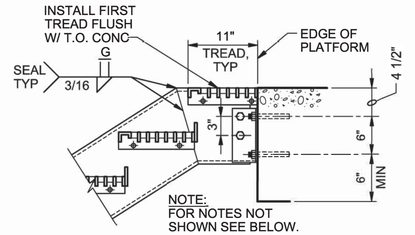

TOP CONNECTION - CONCRETE

STAIRWAY WIDTH	TREAD BEARING BARS ALUMINUM TREAD
2'-3" OR LESS	1" x 3/16"
2'-9" OR LESS	1 1/4" x 3/16"
3'-3" OR LESS	1 1/2" x 3/16"
4'-7" OR LESS	1 3/4" x 3/16"

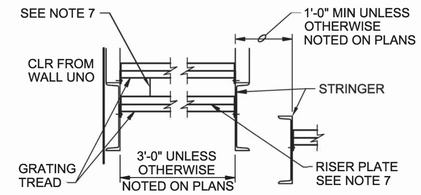

STAIR TREADS

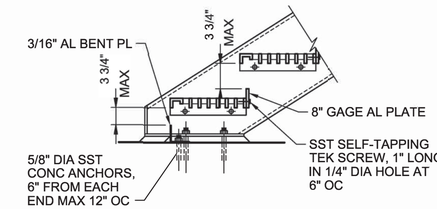

PARTIAL RISER PLATE

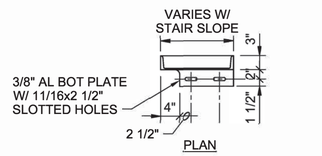

PLAN

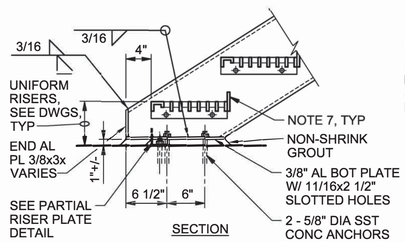

SECTION

BOTTOM CONNECTION

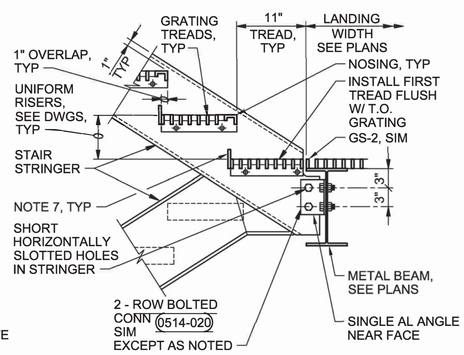

LANDING CONNECTION - ALUMINUM

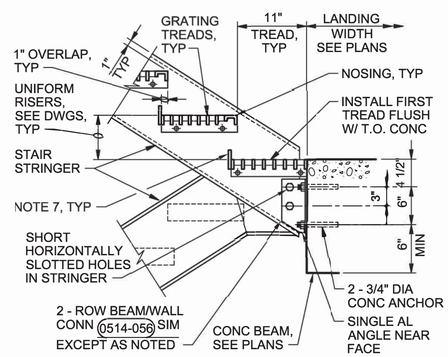

LANDING CONNECTION - CONCRETE

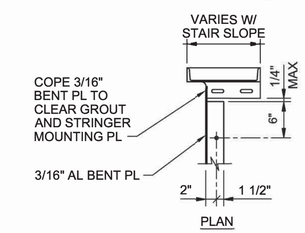

PLAN

BOTTOM CLOSURE PLATE

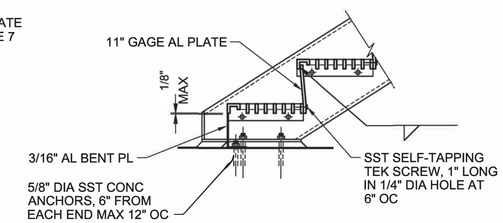

FULL RISER PLATE

STAIR DETAILS - ALUMINUM
NTS

0551-001

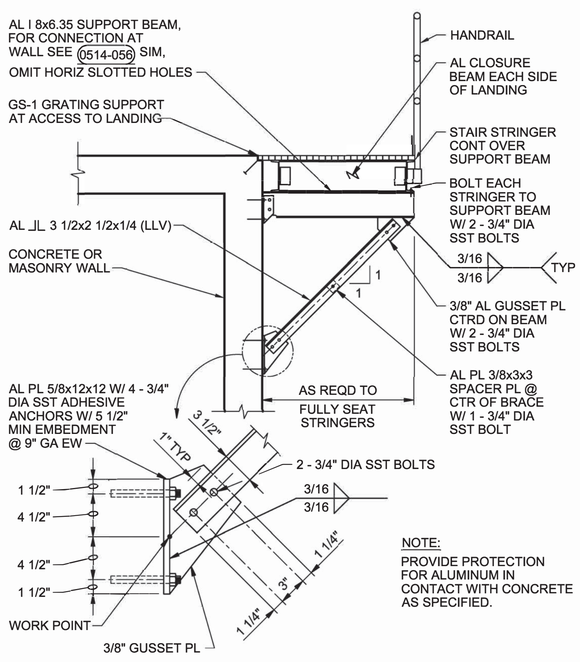

NOTE:
PROVIDE PROTECTION FOR ALUMINUM IN CONTACT WITH CONCRETE AS SPECIFIED.

STAIR LANDING SUPPORT - ALUMINUM
NTS

0551-003

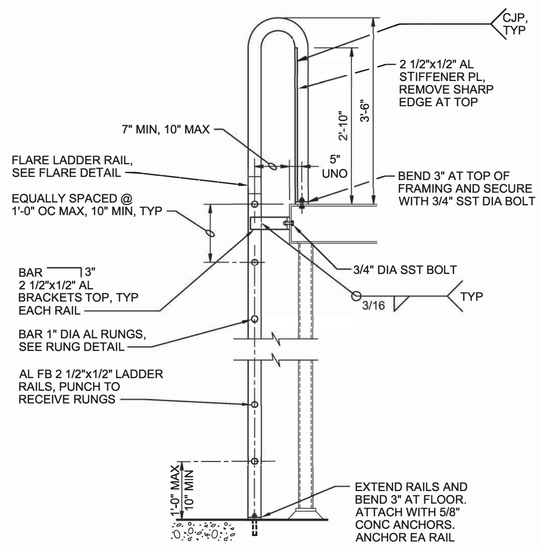

NOTES:
1. PROVIDE PROTECTION FOR ALUMINUM IN CONTACT WITH CONCRETE AS SPECIFIED.
2. AT CONTRACTOR'S OPTION, PRE-ENGINEERED PIPE LADDER AS SPECIFIED MAY BE USED IN LIEU OF FLAT BAR LADDERS.
3. PROVIDE SST CONCRETE ANCHORS LOCATED BELOW MAXIMUM WATER SURFACE.
4. FOR INTERIOR, DRY AREAS, EXTEND RAILS AND BEND 3" AT FLOOR. SECURE WITH 5/8" CONCRETE ANCHORS. DIAGONAL BRACKET NOT REQUIRED IF ALTERNATE SUPPORT PROVIDED.

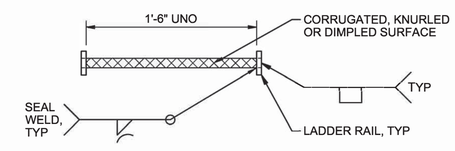

PLAN

RUNG DETAIL

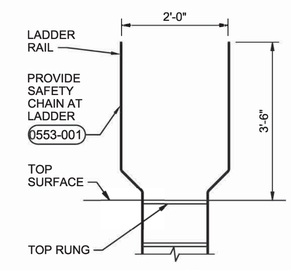

ELEVATION

FLARE DETAIL

FLAT BAR LADDER WITH EXTENSION TYPE "B" - ALUMINUM
NTS (20 FT MAX LADDER HEIGHT)

0551-101B

STATE OF OHIO ARNOLD GILLUM E-65157 REGISTERED PROFESSIONAL ENGINEER 2-31-17

NO.	DATE	REVISION	CHK	APVD	BY	APVD
DSGN	AJ GILLUM	DR	J BRADLEY	CHK	D LANGE	AJ GILLUM

©CH2M HILL 2015. ALL RIGHTS RESERVED.
REUSE OF DOCUMENTS: THIS DOCUMENT, AND THE IDEAS AND DESIGNS INCORPORATED HEREIN, AS AN INSTRUMENT OF PROFESSIONAL SERVICE, IS THE PROPERTY OF CH2M HILL AND IS NOT TO BE USED, IN WHOLE OR IN PART, FOR ANY OTHER PROJECT WITHOUT THE WRITTEN AUTHORIZATION OF CH2M HILL.

Clermont County

VILLAGE OF NEWTONSVILLE
WASTEWATER TREATMENT PLANT & COLLECTION SYSTEM - PART A
CLERMONT COUNTY WATER RESOURCES DEPARTMENT, CLERMONT COUNTY, OHIO

ch2m

STRUCTURAL

TYPICAL DETAILS 7

NTS
VERIFY SCALE
BAR IS ONE INCH ON ORIGINAL DRAWING.
0 1"

DATE	2017-03-31
PROJ	665163
DWG	S-014
SHEET	35 of 91

BID READY

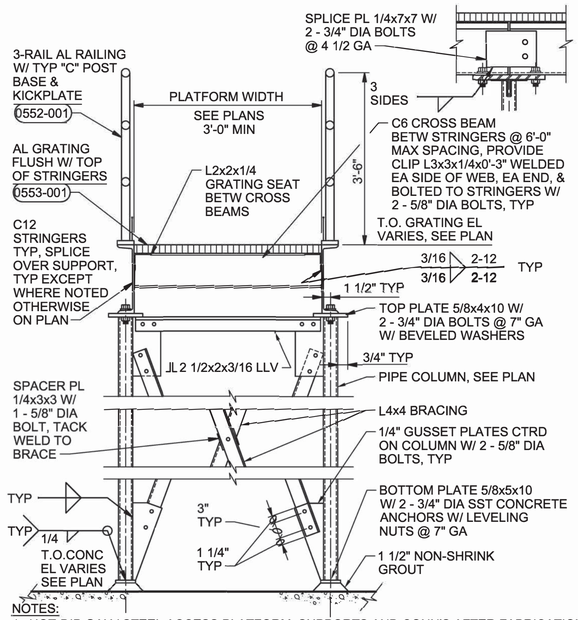

NOTES:
1. HOT-DIP GALV STEEL ACCESS PLATFORM, SUPPORTS AND CONN'S AFTER FABRICATION.
2. PROVIDE PROTECTION BETWEEN AL & GALV STEEL AS SPECIFIED IN SPEC 09 90 00 FOR DISSIMILAR METALS.

ACCESS PLATFORM SUPPORT - STEEL

NTS

0551-242

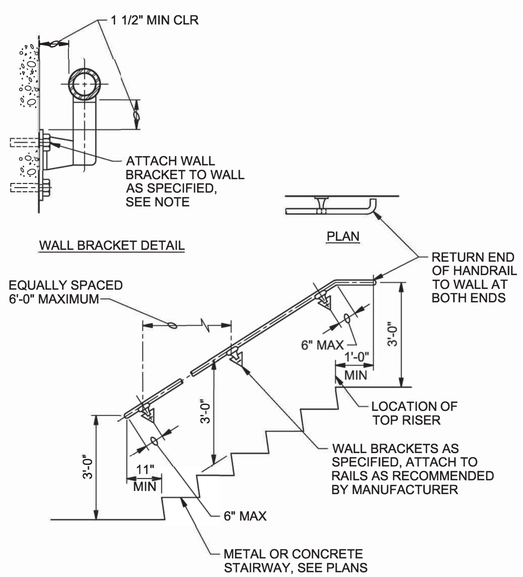

NOTE:
FOR ANCHORAGE TO WOOD OR METAL STUD FRAMING PROVIDE SOLID BLOCKING.

WALL HAND RAIL - ALUMINUM

NTS

0552-002

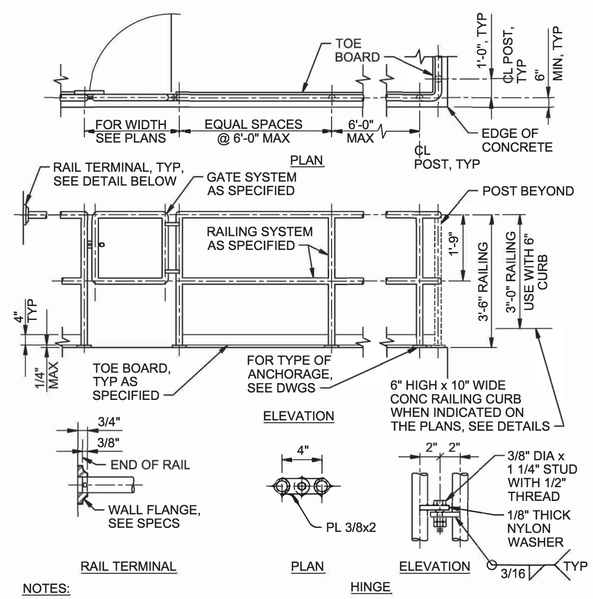

NOTES:
1. FASTEN RAIL TO WALL FLANGE PER MANUFACTURER'S RECOMMENDATIONS.
2. WALL FLANGE TO BE MOUNTED TO WALL WITH (2) 3/8" DIA SST WEDGE ANCHORS.
3. AT CONTRACTOR'S OPTION FABRICATE HINGES OR PROVIDE OTHER HINGES AS SPECIFIED. ANODIZE FINISH AFTER ALL WELDING AS SPECIFIED.

RAILING - 2 RAIL - ALUMINUM

NTS

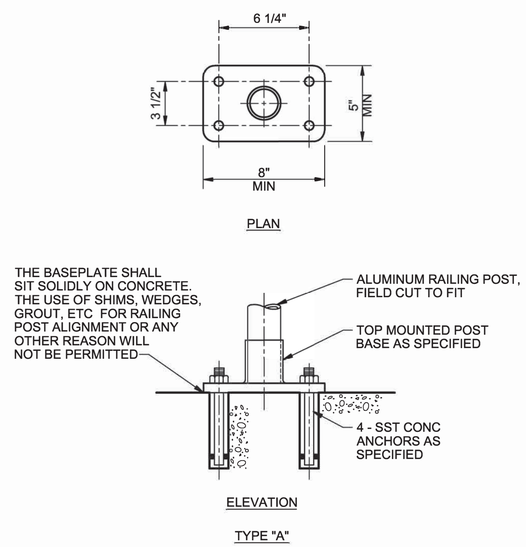

NOTE:
PROVIDE PROTECTION FOR DISSIMILAR METALS AND CONCRETE PER SPECIFICATIONS.

RAILING POST ANCHORAGE - ALUMINUM

NTS

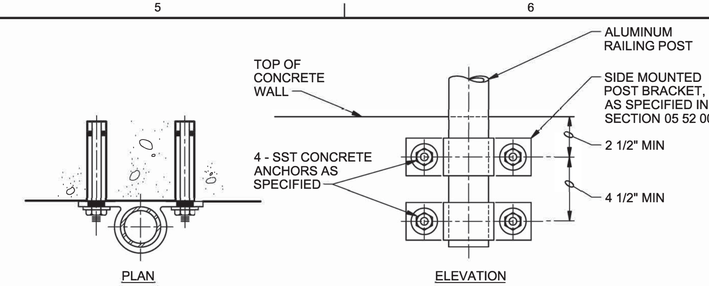

NOTES:
1. PROVIDE PROTECTION FOR DISSIMILAR METALS AND CONCRETE PER SPECIFICATIONS.
2. USE SIDE MOUNTED POST BRACKET AS A TEMPLATE FOR THE ANCHOR BOLTS.

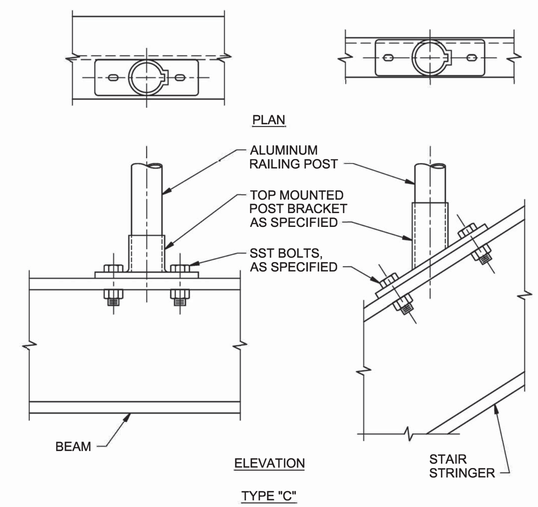

NOTE:
PROVIDE PROTECTION FOR DISSIMILAR METALS AND CONCRETE PER SPECIFICATIONS.

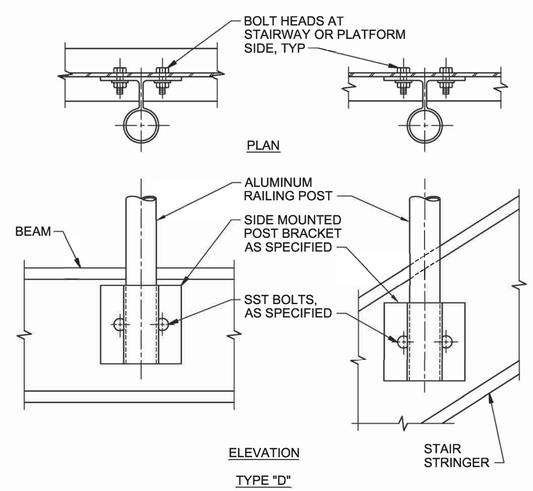

NOTE:
PROVIDE PROTECTION FOR DISSIMILAR METALS AND CONCRETE PER SPECIFICATIONS.

0552-001

STATE OF OHIO
ARNOLD GILLUM
E-65157
REGISTERED PROFESSIONAL ENGINEER
2-31-17

NO.	DATE	REVISION	BY	APVD
DSGN	AJ GILLUM	DR J BRADLEY	CHK D LANGE	APVD AJ GILLUM

©CH2M HILL 2015. ALL RIGHTS RESERVED.

REUSE OF DOCUMENTS: THIS DOCUMENT, AND THE IDEAS AND DESIGNS INCORPORATED HEREIN, AS AN INSTRUMENT OF PROFESSIONAL SERVICE, IS THE PROPERTY OF CH2M HILL AND IS NOT TO BE USED, IN WHOLE OR IN PART, FOR ANY OTHER PROJECT WITHOUT THE WRITTEN AUTHORIZATION OF CH2M HILL.

Clermont County

VILLAGE OF NEWTONSVILLE
WASTEWATER TREATMENT PLANT & COLLECTION SYSTEM - PART A
CLERMONT COUNTY WATER RESOURCES DEPARTMENT, CLERMONT COUNTY, OHIO

ch2m

STRUCTURAL

TYPICAL DETAILS 8

NTS

VERIFY SCALE
BAR IS ONE INCH ON ORIGINAL DRAWING.
0 1"

DATE	2017-03-31
PROJ	665163
DWG	S-015
SHEET	36 of 91

BID READY

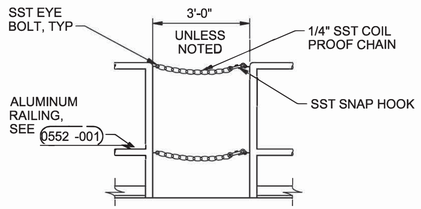

SAFETY CHAIN

NTS

0552-071

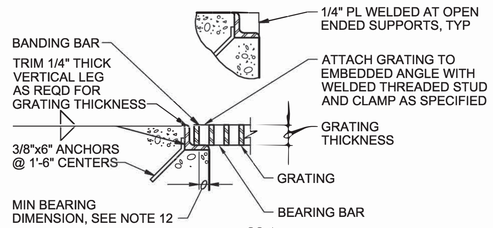

GS-1

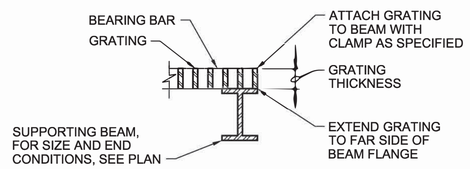

GS-2 - ONE SIDED

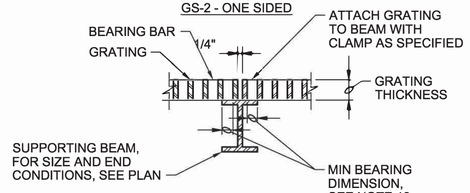

GS-2 - TWO SIDED

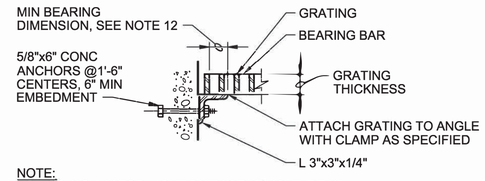

NOTE:
USE GS-3 ONLY FOR LIGHT DUTY GRATING, TYPE 'A'.

GS-3

GENERAL NOTES:

1. GRATING SHALL BE LIGHT DUTY GRATING UNLESS OTHERWISE NOTED ON DRAWINGS.
2. GRATING SPAN ←→ SEE PLAN.
3. INDIVIDUAL GRATING SECTIONS SHALL NOT EXCEED 3'-0" IN WIDTH OR WEIGH MORE THAN 150 POUNDS, UNLESS INDICATED OTHERWISE, FOR TYPES 'A' & 'B' GRATING. TYPE 'C' GRATING SHALL HAVE A MINIMUM WIDTH OF 2'-0" REGARDLESS OF WEIGHT.
4. SHOP DRAWINGS BASED ON FIELD DIMENSIONS SHALL BE SUBMITTED TO THE ENGINEER PRIOR TO FABRICATION.
5. MATERIAL FOR SUPPORTS OF STEEL AND ALUMINUM GRATING TO BE SAME AS GRATING, EXCEPT METAL SUPPORTS THAT ARE TO BE EMBEDDED IN CONCRETE SHALL BE TYPE 316 STAINLESS STEEL.
6. UNLESS NOTED OTHERWISE ON PLANS, GRATING THICKNESS SHALL BE AS TABULATED IN "GRATING THICKNESS TABLE" FOR APPLICABLE GRATING TYPE.
7. FOR SERRATED BEARING BARS, INCREASE GRATING THICKNESSES SHOWN IN TABLES BY 1/4".
8. BEARING BAR THICKNESS FOR GRATING TO BE 3/16" MINIMUM. SEE SPECIFICATIONS FOR SPACING OF BEARING AND CROSS BARS.
9. BAND ALL EDGES. MATCH DEPTH OF BEARING BAR.
10. TYPE OF MATERIAL USED SHALL BE AS SHOWN ON PLANS OR AS SPECIFIED. THIS STANDARD DETAIL INCLUDES 2 TYPES, ALTHOUGH BOTH MAY NOT BE INCLUDED IN PROJECT.
11. THE HORIZONTAL CLEARANCE BETWEEN THE GRATING AND GRATING SUPPORTS SHALL NOT BE LESS THAN 1/4" NOR GREATER THAN 1/2" AND AS SPECIFIED.
12. FOR TYPE A & B MIN BEARING HORIZONTAL DIMENSION = 1" FOR GRATING DEPTH 2 1/4" OR LESS, MIN BEARING HORIZONTAL = 2" FOR GRATING DEPTH GREATER THAN 2 1/4"

STANDARD GRATING

NTS

0553-001

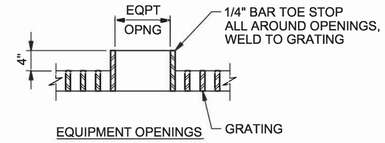

LIGHT DUTY GRATING
TYPE 'A'
(100 PSF)

GRATING THICKNESS TABLE

MAXIMUM SPAN	STEEL	ALUMINUM
3'-6"	1"	1 1/4"
4'-0"	1"	1 1/2"
4'-6"	1"	1 3/4"
5'-0"	1 1/4"	1 3/4"
5'-6"	1 1/4"	2"
6'-0"	1 1/2"	2 1/4"
6'-6"	1 1/2"	2 1/4"
7'-0"	1 3/4"	2 1/2"

STATE OF OHIO
ARNOL GILLUM
E-65157
3-31-17
REGISTERED PROFESSIONAL ENGINEER

NO.	DATE	REVISION	BY	APVD

DSGN AJ GILLUM | DR J BRADLEY | CHK D LANGE | APVD AJ GILLUM

REUSE OF DOCUMENTS: THIS DOCUMENT, AND THE IDEAS AND DESIGNS INCORPORATED HEREIN, AS AN INSTRUMENT OF PROFESSIONAL SERVICE, IS THE PROPERTY OF CH2M HILL AND IS NOT TO BE USED, IN WHOLE OR IN PART, FOR ANY OTHER PROJECT WITHOUT THE WRITTEN AUTHORIZATION OF CH2M HILL.
©CH2M HILL 2015. ALL RIGHTS RESERVED.

VILLAGE OF NEWTONSVILLE
WASTEWATER TREATMENT PLANT & COLLECTION SYSTEM - PART A
CLERMONT COUNTY WATER RESOURCES DEPARTMENT, CLERMONT COUNTY, OHIO

STRUCTURAL
TYPICAL DETAILS 9

NTS
VERIFY SCALE
BAR IS ONE INCH ON ORIGINAL DRAWING.
0 1"

DATE	2017-03-31
PROJ	665163
DWG	S-016
SHEET	37 of 91

BID READY

PIPE AND FITTING SYMBOLS

DOUBLE LINE	SINGLE LINE	
		EXISTING PIPE
		NEW PIPE
		EXISTING PIPE TO BE ABANDONED
		EXISTING PIPE TO BE REMOVED
		WELDED JOINT
		GROOVED END JOINT
		FLANGED JOINT
		MECHANICAL JOINT & PROPRIETARY RESTRAINED JOINT
		BELL & SPIGOT JOINT (LEADED)
		HUB & SPIGOT JOINT (RUBBER GASKET)
		BALL JOINT
		ADAPTER SIDE GROOVED END ADAPTER FLANGE
		FLANGED COUPLING ADAPTER
		FLEXIBLE COUPLING
		METAL BELLOWS EXP JOINT
		ELASTOMER BELLOWS EXP JOINT
		ELBOW UP
		ELBOW DOWN
		TEE UP
		TEE DOWN
		LATERAL UP
		LATERAL DOWN
		CONCENTRIC REDUCER
		ECCENTRIC REDUCER

DOUBLE LINE	SINGLE LINE	
		REDUCING BUSHING
		UNION
		CAP
		ANCHOR
		ELBOW, 90 DEGREE
		CROSS
		TEE
		ELBOW, 45 DEGREE
		LATERAL

NOTES:

1. ONLY FLANGED END CONNECTIONS ARE SHOWN HERE FOR DOUBLE LINE FITTINGS. FITTINGS WITH OTHER END PATTERNS ARE SHOWN SIMILARLY ON THE CONSTRUCTION DRAWINGS. ALSO SEE PIPING SPECIFICATIONS.
2. SYMBOLS SHOWN HERE FOR SINGLE LINE FITTINGS ARE GENERIC ONLY. REFER TO PIPING SPECIFICATIONS FOR SPECIFIC END CONNECTIONS FOR SINGLE LINE PIPE AND FITTINGS.
3. EXISTING PIPE AND EQUIPMENT IS SHOWN LIGHT-LINED AND/OR SCREENED AND IS NOTED AS EXISTING. NEW PIPING AND EQUIPMENT IS SHOWN HEAVY-LINED.

PIPING DESIGNATION

EXAMPLE:

16" TWE

16" TWE

SERVICE, SEE SPECIFICATIONS FOR PIPE SCHEDULE

PIPE DIAMETER

VALVE SYMBOLS

SINGLE LINE	DOUBLE LINE
GATE	
KNIFE GATE	OR
BUTTERFLY	OR
GLOBE	OR
BALL	OR
SEATING PORT ECCENTRIC PLUG	OR
PLUG OR COCK	OR
NEEDLE	OR
DIAPHRAGM	OR
PINCH	OR
SWING CHECK	OR
BALL CHECK	OR
HOSE VALVE (HV- X) OR (V-X) X = NO. IN SPECS	
SAMPLE	
MUD	
PRESSURE RELIEF	
AIR AND/OR VACUUM RELEASE	
REGULATED SIDE PRESSURE CONTROL (INTERNAL PILOT)	
REGULATED SIDE PRESSURE CONTROL (EXTERNAL PILOT)	
MULTI-PORT VALVE, ARROWS INDICATE FLOW PATTERN. SEATING PORTS ARE IMPLIED BY INDICATED FLOW PATTERN.	
TELESCOPING SCUM VALVE	

VALVE DESIGNATIONS

MANUAL VALVES AND CHECK VALVES

V 500

VALVE DESIGNATION

VALVE TYPE, SEE SPECIFICATIONS

CONTROL VALVES

M

UNIT PROCESS

VALVE FUNCTION

20FV
6112

UNIQUE TAG NUMBER

NOTE:
SEE I&C LEGENDS FOR FURTHER DEFINITIONS AND ACTUATOR TYPES.

SELF-CONTAINED REGULATING VALVES

20PRV8011

UNIQUE TAG NUMBER. SEE SELF-CONTAINED REGULATION VALVE SCHEDULE IN THE SPECIFICATIONS

VALVE TYPE AND FUNCTON. SEE I&C LEGENDS FOR FURTHER DEFINITIONS

PROCESS OR FACILITY NUMBER.
05 = YARD
95 = CONTROL BUILDING
SEE P&IDS FOR PROCESS VALVES

ACTUATOR SYMBOLS

PNEUMATIC DIAPHRAGM

PNEUMATIC CYLINDER

M — ELECTRIC MOTOR

H — HYDRAULIC

MANUAL

S — SOLENOID

E/H — ELECTRO HYDRAULIC

MECHANICAL LEGEND AND NOTES

GENERIC PIPING NOTES

1. LAY PIPE TO UNIFORM GRADE BETWEEN INDICATED ELEVATION POINTS.
2. SIZE OF FITTINGS SHOWN ON DRAWINGS SHALL CORRESPOND TO ADJACENT STRAIGHT RUN OF PIPE, UNLESS OTHERWISE INDICATED. TYPE OF JOINT AND FITTING MATERIAL SHALL BE THE SAME AS SHOWN FOR ADJACENT STRAIGHT RUN OF PIPE.
3. LOCATION AND NUMBER OF PIPE HANGERS AND PIPE SUPPORTS SHOWN IS ONLY APPROXIMATE. CONTRACTOR SHALL DESIGN SUPPORTS AS SPECIFIED.
4. ALL JOINTS SHALL BE WATERTIGHT. WALL PIPES SHALL BE USED WHEREVER PIPING PASSES FROM A STRUCTURE TO BACKFILL.
5. ALL FLEXIBLE CONNECTORS AND COUPLING ADAPTERS SHALL BE PROVIDED WITH THRUST PROTECTION AS SPECIFIED, UNLESS OTHERWISE NOTED. THRUST PROTECTION SHALL BE ADEQUATE FOR TEST PRESSURES SPECIFIED.
6. SYMBOLS, LEGENDS, AND PIPE USE IDENTIFICATIONS SHOWN SHALL BE FOLLOWED THROUGHOUT THE DRAWINGS, WHEREVER APPLICABLE. NOT ALL OF THE VARIOUS PIPING COMPONENTS ARE NECESSARILY USED IN THE PROJECT.
7. ALL BURIED PIPING SPECIFIED TO BE PRESSURE TESTED, EXCEPT FLANGED, WELDED, OR SCREWED PIPING, SHALL BE PROVIDED WITH THRUST PROTECTION AS SPECIFIED, UNLESS OTHERWISE NOTED.
8. NUMBER AND LOCATION OF UNIONS SHOWN ON DRAWINGS IS ONLY APPROXIMATE. PROVIDE ALL UNIONS NECESSARY TO FACILITATE CONVENIENT REMOVAL OF VALVES AND MECHANICAL EQUIPMENT.
9. WHERE A GROOVED END COUPLING IS SHOWN, IT SHALL BE THE RIGID JOINT TYPE, UNLESS OTHERWISE SPECIFIED. WHERE A FLANGED COUPLING ADAPTER IS SHOWN, A STANDARD FLANGE SHALL BE JOINED TO THE COUPLING ADAPTER.

NOTE:
FLOW STREAM IDENTIFICATIONS ARE SHOWN ON THE INSTRUMENTATION AND CONTROL LEGENDS

STATE OF OHIO
JAMES R. GAGNON
E-66893
REGISTERED PROFESSIONAL ENGINEER
3/31/17

NO.	DATE	REVISION	BY	APVD

DSGN J. GAGNON | DR J BRADLEY | CHK T BECHTEL | APVD J GAGNON

©CH2M HILL 2015. ALL RIGHTS RESERVED.

REUSE OF DOCUMENTS: THIS DOCUMENT, AND THE IDEAS AND DESIGNS INCORPORATED HEREIN, AS AN INSTRUMENT OF PROFESSIONAL SERVICE, IS THE PROPERTY OF CH2M HILL AND IS NOT TO BE USED, IN WHOLE OR IN PART, FOR ANY OTHER PROJECT WITHOUT THE WRITTEN AUTHORIZATION OF CH2M HILL.

Clermont County

VILLAGE OF NEWTONSVILLE
WASTEWATER TREATMENT PLANT & COLLECTION SYSTEM - PART A
CLERMONT COUNTY WATER RESOURCES DEPARTMENT, CLERMONT COUNTY, OHIO

ch2m

PROCESS/MECHANICAL

PROCESS MECHANICAL LEGEND

NTS

VERIFY SCALE

BAR IS ONE INCH ON ORIGINAL DRAWING.
0 1"

DATE	2017-03-31
PROJ	652379
DWG	D-001
SHEET	38 of 91

BID READY

DESIGN DATA

DESIGN RAW WASTEWATER FLOWS

DESIGN AVERAGE	57,110 GPD
MAXIMUM MONTH	77,000 GPD
MAXIMUM DAY	133,000 GPD
PEAK HOUR	228,000 GPD

DESIGN RAW WASTEWATER STRENGTHS AND LOADS

	AVERAGE DAY	MAXIMUM DAY
CBOD5	170 MG/L (81 PPD)	161 MG/L (183 PPD)
TSS	190 MG/L (90 PPD)	180 MG/L (205 PPD)
NH4-N	24 MG/L (11 PPD)	23 MG/L (26 PPD)
TP	7 MG/L (3 PPD)	7 MG/L (8 PPD)

EFFLUENT LIMITS

	7-DAY AVERAGE	30-DAY AVERAGE
CBOD5	15 MG/L	10 MG/L
TSS	18 MG/L	12 MG/L
NH4-N (SUMMER)	1.5 MG/L	1.0 MG/L
NH4-N (WINTER)	4.2 MG/L	2.8 MG/L
TP (SUMMER)	1.5 MG/L	1.0 MG/L
TP (WINTER)	N/A	N/A

INFLUENT PUMPING

TYPE	SUBMERSIBLE
DRIVE	VARIABLE FREQUENCY
MOTOR	5 HP
NUMBER OF UNITS	2
CAP, EACH	160 GPM (230,401 GPD)
CAP, FIRM	160 GPM (230,401 GPD)

INFLUENT SCREEN

TYPE	FINE SCREEN
NUMBER OF UNITS	1
MOTOR	1.5 HP
SCREEN OPENING	6 MM
PEAK RATED FLOW	0.5 MGD, MIN.
SCREENINGS COMPACTOR	SCREW TYPE

STANDBY SCREENING

TYPE	MANUAL BAR SCREEN
NUMBER OF UNITS	1
CLEAR OPENING	1 INCH
CHANNEL WIDTH	18 INCHES
CHANNEL DEPTH	30 INCHES

SECONDARY TREATMENT

TYPE	SEQUENCING BATCH REACTOR
NUMBER OF UNITS	2 BASINS
MAXIMUM TOTAL VOLUME	0.09 MG
SIDE WATER DEPTH	
MINIMUM	9.1 FT
MAXIMUM	13 FT
DECANTER	
TYPE	FLOATING
FLOWRATE	246 GPM AVERAGE
MIXERS	
TYPE	FLOATING, DIRECT DRIVE
NUMBER OF UNITS	1 PER BASIN
MOTOR, EA	1 HP
BLOWERS	
TYPE	POSITIVE DISPLACEMENT
NUMBER OF UNITS	3
CAPACITY, EA	130 SCFM
FIRM CAPACITY	260 SCFM
MOTOR	10 HP
DRIVE	VARIABLE FREQUENCY

TERTIARY FILTERS

TYPE	ROTATING DISC
NUMBER OF UNITS	2
FILTER AREA, PER UNIT	43.2 SF MIN.
TOTAL CAPACITY	540 GPM (6.25 GPM/SF)
DRIVE MOTOR, EA	1/2 HP
BACKWASH RATE	130 GPM MAX.
BACKWASH PUMPS	
NUMBER OF UNITS	1 PER UNIT
CAPACITY	130 GPM MAX.
MOTOR, EA	2 HP

ULTRAVIOLET DISINFECTION

CONFIGURATION	HORIZONTAL, OPEN CHANNEL
RATED CAPACITY	0.389 MGD
DESIGN UV TRANSMITTANCE	65%
NUMBER OF CHANNELS	1
NUMBER OF BANKS	2 MAX.
UV MODULES PER BANK	6 MAX.
LAMPS PER MODULE	4 MAX.
LAMP TYPE	LOW PRESSURE
MAX ELECTRICAL LOADS	5.4 KW
DISINFECTION LIMITS	
30-DAY GM E. COLI	161/100 ML
7-DAY GM E. COLI	362/100 ML

POST AERATION

TYPE	OPEN CHANNEL/CASCADE STEPS
TOTAL DROP	10 FT
WIDTH	3.5 FT
DISSOLVED OXYGEN LIMIT	6.0 MG/L MIN.

DESIGN DATA (CONT'D)

SOLIDS PROCESSING DESIGN DATA

EXCESS ACTIVATED SLUDGE	
DESIGN AVERAGE	72 PPD
MAXIMUM MONTH	98 PPD
SLUDGE STORAGE	
BASIN DIMENSIONS	27'X7'
BASIN VOLUME	18,370 GALLONS
TOTAL STORAGE CAPACITY	
AT DESIGN FLOW	5.3 DAYS
BLOWERS	
TYPE	POSITIVE DISPLACEMENT
NUMBER OF UNITS	2
CAPACITY, EA	85 SCFM
MOTOR, EA	5 HP+
DRIVE	VARIABLE FREQUENCY

CHEMICAL (ALUM) FEED

MAX FEED RATE	7.0 GPD (W/ BIO-P REMOVAL)
MIN STORAGE	70 GALLONS (TEN STATES 111.41)
CHEMICAL CONCENTRATION	49%

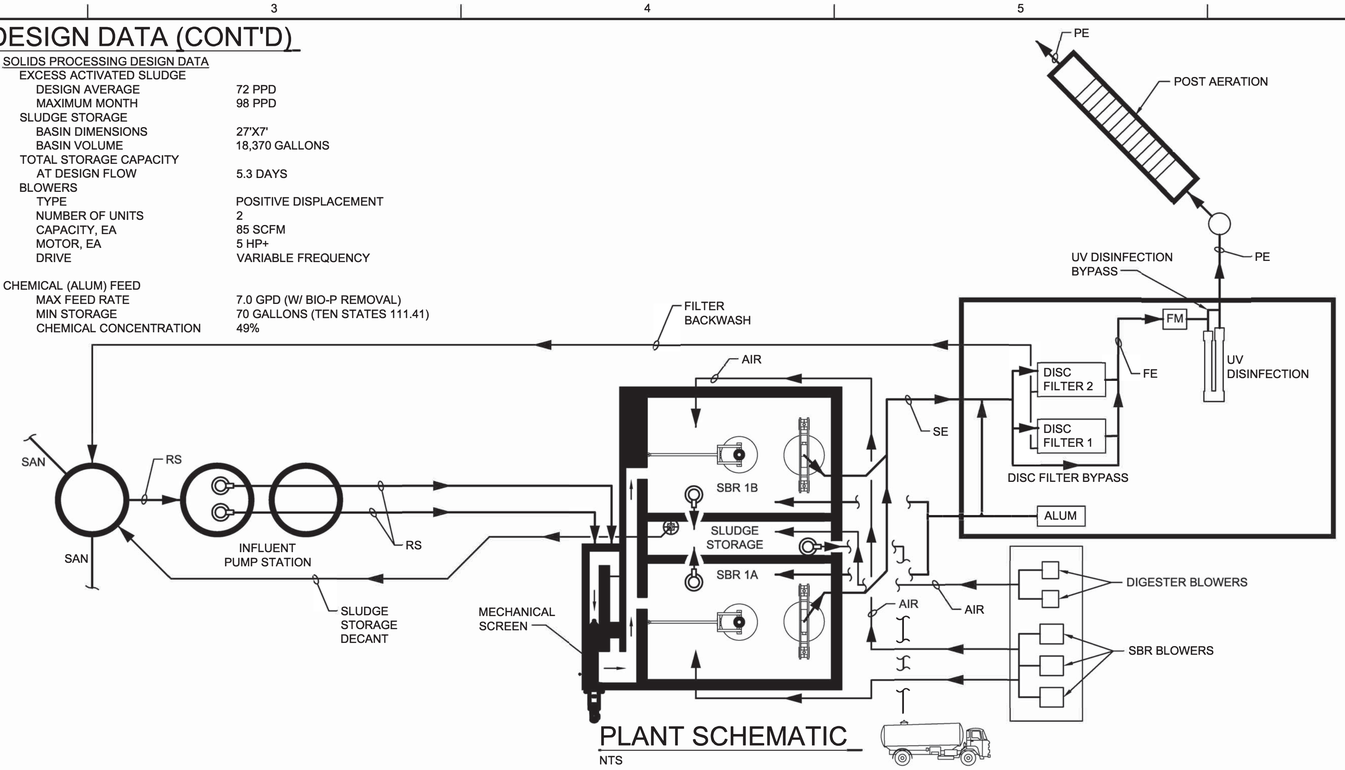

PLANT SCHEMATIC

NTS

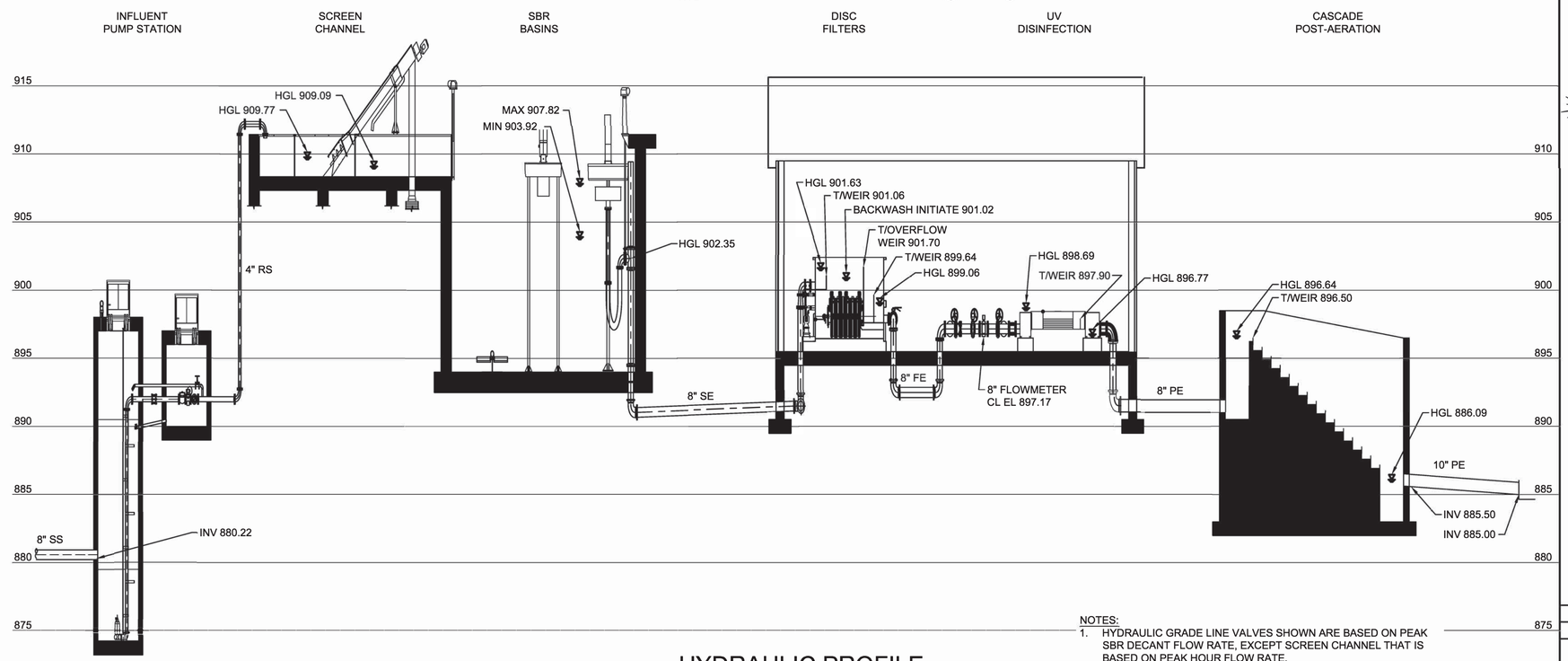

HYDRAULIC PROFILE

NTS

NOTES:
1. HYDRAULIC GRADE LINE VALVES SHOWN ARE BASED ON PEAK SBR DECANT FLOW RATE, EXCEPT SCREEN CHANNEL THAT IS BASED ON PEAK HOUR FLOW RATE.
2. PEAK SBR DECANT FLOW RATE = 0.389 MGD.

STATE OF OHIO JAMES R. GAGNON E-66893 REGISTERED PROFESSIONAL ENGINEER 3/31/17

NO.	DATE	REVISION	BY	APVD

DSGN J. GAGNON | DR J BRADLEY | CHK T BECHTEL | APVD J GAGNON

©CH2M HILL 2015. ALL RIGHTS RESERVED.

REUSE OF DOCUMENTS: THIS DOCUMENT, AND THE IDEAS AND DESIGNS INCORPORATED HEREIN, AS AN INSTRUMENT OF PROFESSIONAL SERVICE, IS THE PROPERTY OF CH2M HILL AND IS NOT TO BE USED, IN WHOLE OR IN PART, FOR ANY OTHER PROJECT WITHOUT THE WRITTEN AUTHORIZATION OF CH2M HILL.

Clermont County

VILLAGE OF NEWTONSVILLE
WASTEWATER TREATMENT PLANT & COLLECTION SYSTEM - PART A
CLERMONT COUNTY WATER RESOURCES DEPARTMENT, CLERMONT COUNTY, OHIO

ch2m

PROCESS/MECHANICAL
DESIGN DATA, PLANT SCHEMATIC & HYDRAULIC PROFILE

NTS
VERIFY SCALE
BAR IS ONE INCH ON ORIGINAL DRAWING.
0 1"

DATE	2017-03-31
PROJ	652379
DWG	D-002
SHEET	39 of 91

BID READY

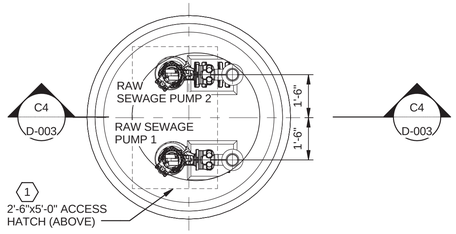

BOTTOM OF WET WELL

3/8" = 1'-0"

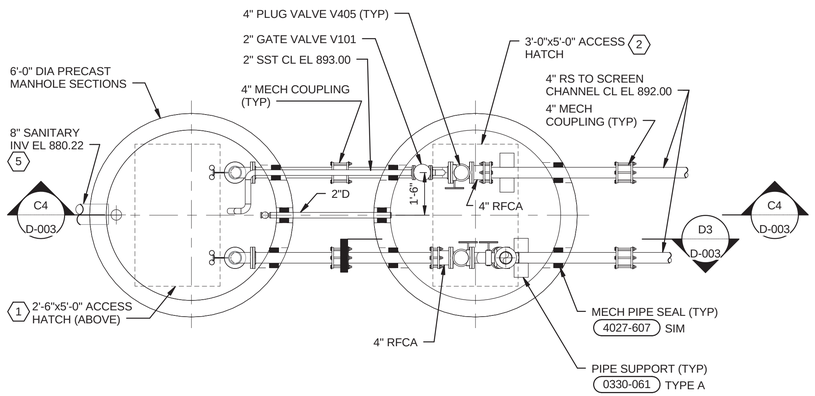

VALVE VAULT BOTTOM

3/8" = 1'-0"

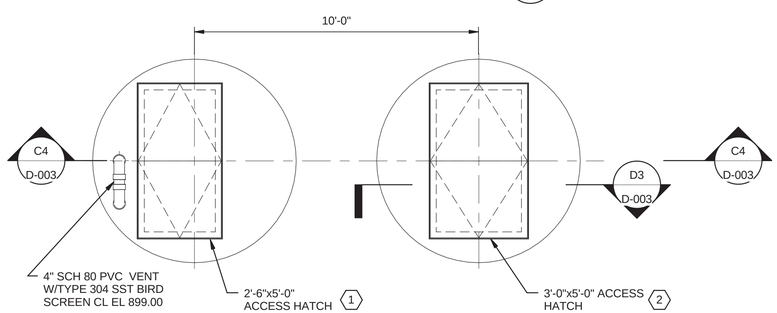

PUMP STATION TOP

3/8" = 1'-0"

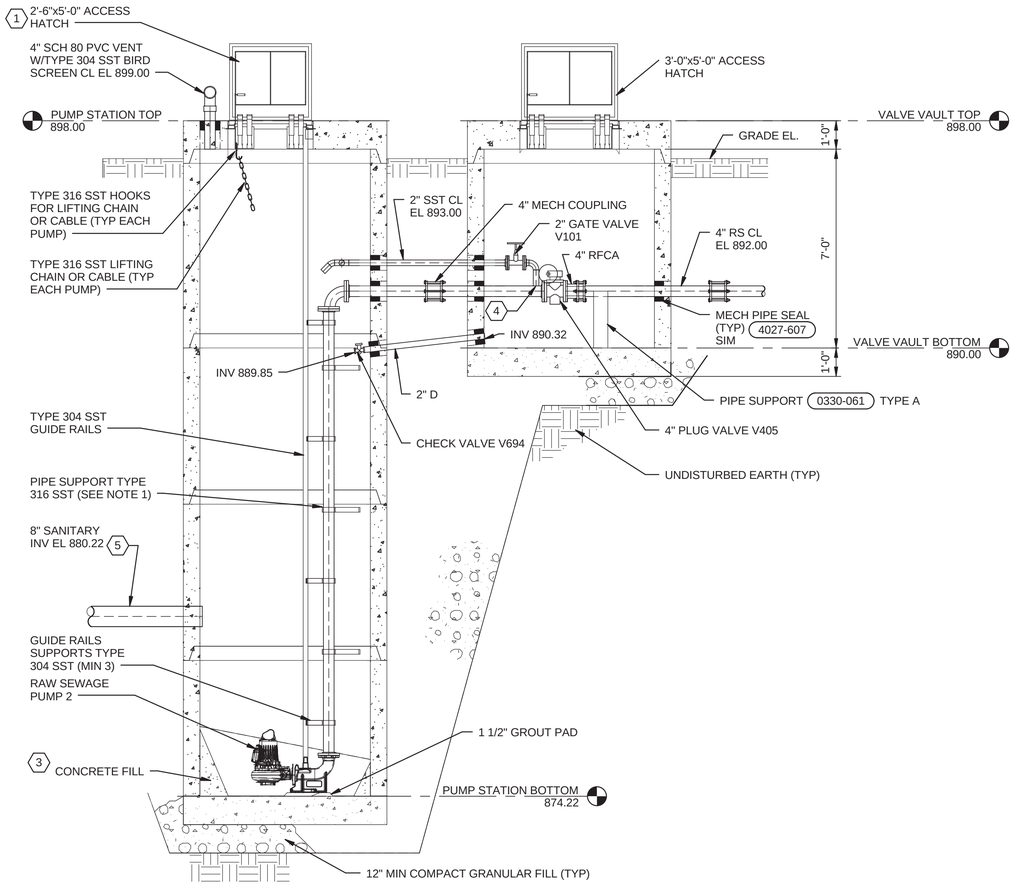

C4 SECTION

3/8" = 1'-0"

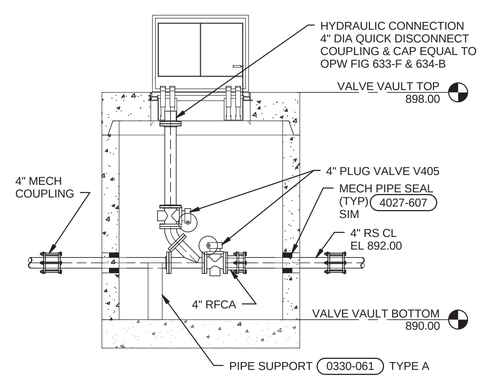

D3 SECTION

3/8" = 1'-0"

GENERAL SHEET NOTES:

1. NOT ALL PIPE SUPPORTS ARE SHOWN.
2. EQUIPMENT LAYOUT, DIMENSIONS, ELEVATIONS AND LOCATIONS SHALL COMPLY WITH EQUIPMENT MANUFACTURER'S RECOMMENDATIONS AND APPROVED SHOP DRAWINGS.
3. PROVIDE SUBMERSIBLE PUMPS AS SHOWN.
4. GUIDE RAILS SHALL BE PROVIDED BY THE PUMP MANUFACTURER.
5. REFER TO SPECIFICATIONS 33 05 13.16 PRECAST UTILITY STRUCTURES FOR PRECAST VALVE VAULT AND PUMP STATION DESIGN CRITERIA.

SHEET KEYNOTES:

1 ACCESS HATCH SIZE AND LOCATIONS SHALL BE COORDINATED BY THE CONTRACTOR WITH THE PUMP MANUFACTURER.

2 ACCESS HATCH DRAIN SHALL BE ROUTED TO FLOOR

3 CONTRACTOR SHALL PLACE CONCRETE FILL IN ACCORDANCE WITH PUMP MANUFACTURER'S RECOMMENDATIONS

4 TAP 4" DIP SPOOL AT FACTORY AND PROVIDE SERVICE SADDLE FOR 2" SST CONNECTION.

5 REFERENCE CLERMONT COUNTY WATER RESOURCES DEPARTMENT DRAWING NO. S1.2 FOR PIPE PENETRATION DETAIL.

STATE OF OHIO
JAMES R. GAGNON
E-66893
3/31/17
REGISTERED PROFESSIONAL ENGINEER

NO.	DATE	REVISION	BY	APVD
DSGN	J. GAGNON	DR J. BRADLEY / CHK T BECHTEL	J GAGNON	APVD

©CH2M HILL 2014. ALL RIGHTS RESERVED.

REUSE OF DOCUMENTS: THIS DOCUMENT, AND THE IDEAS AND DESIGNS INCORPORATED HEREIN, AS AN INSTRUMENT OF PROFESSIONAL SERVICE, IS THE PROPERTY OF CH2M HILL AND IS NOT TO BE USED, IN WHOLE OR IN PART, FOR ANY OTHER PROJECT WITHOUT THE WRITTEN AUTHORIZATION OF CH2M HILL.

Clermont County

VILLAGE OF NEWTONSVILLE
WASTEWATER TREATMENT PLANT & COLLECTION SYSTEM - PART A
CLERMONT COUNTY WATER RESOURCES DEPARTMENT, CLERMONT COUNTY, OHIO

ch2m

PROCESS

RAW SEWAGE PUMP STATION PLANS AND SECTIONS

3/8" = 1'-0"

VERIFY SCALE

BAR IS ONE INCH ON ORIGINAL DRAWING
0 1"

DATE	2017-03-31
PROJ	665163
DWG	D-003
SHEET	40 of 91

BID READY

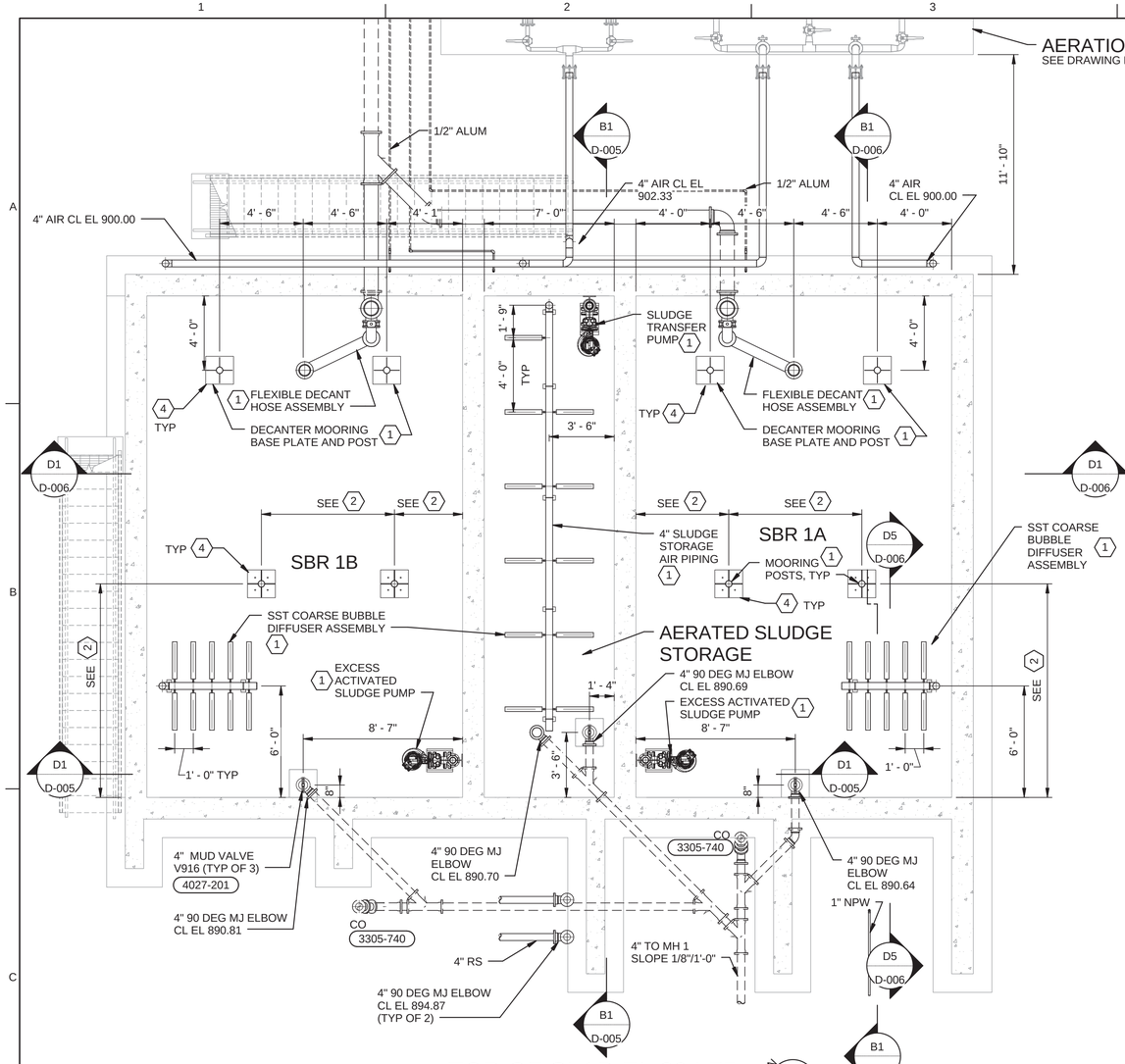

TOP OF SLAB EL 894.75

1/4" = 1'-0"

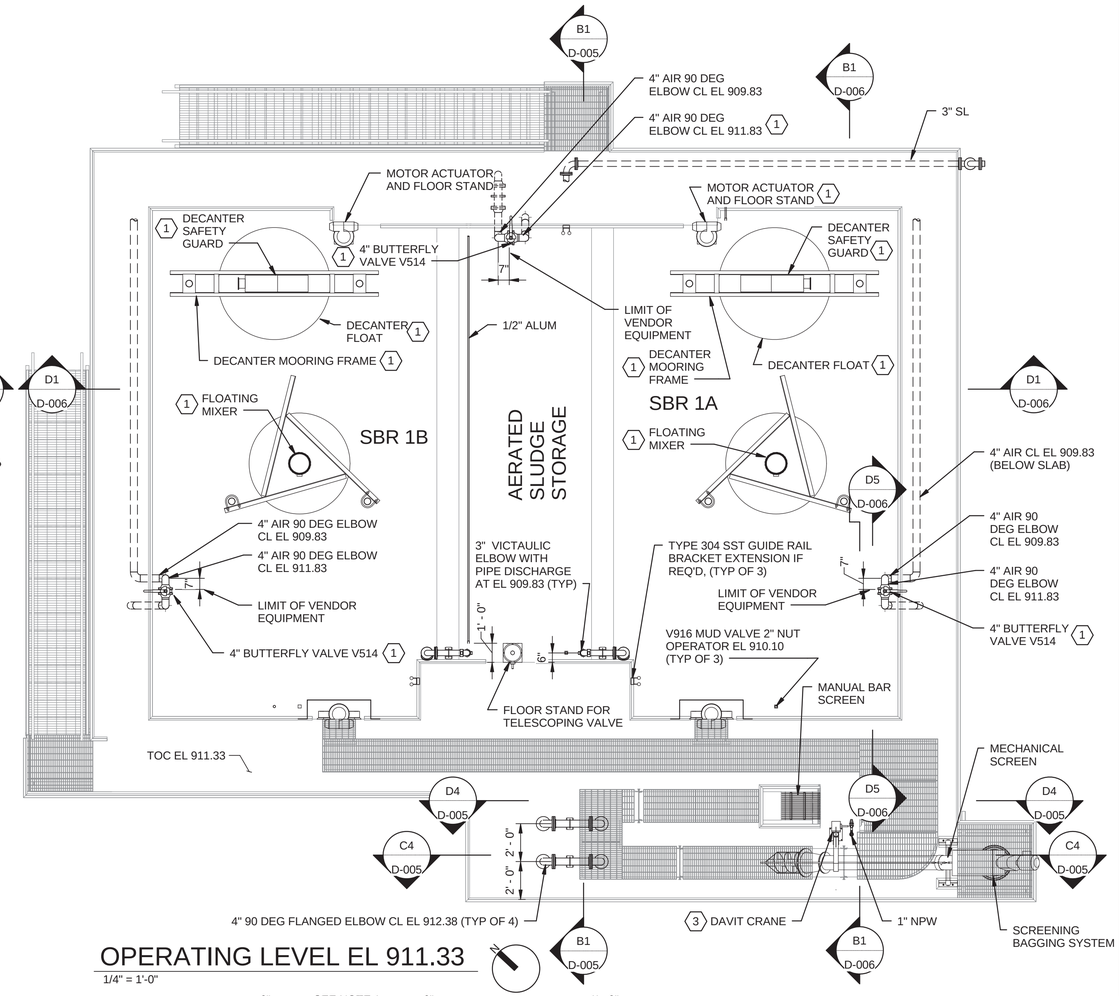

OPERATING LEVEL EL 911.33

1/4" = 1'-0"

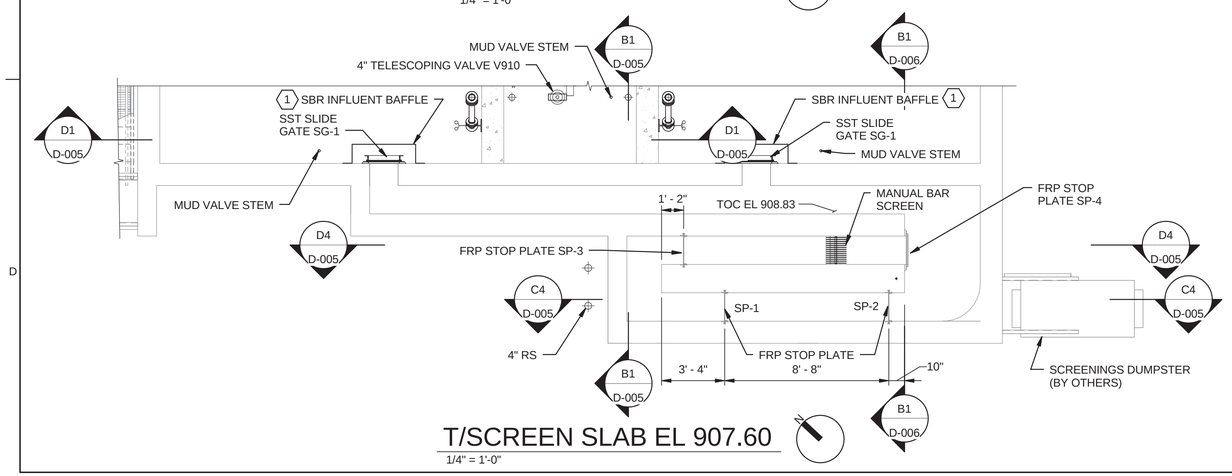

T/SCREEN SLAB EL 907.60

1/4" = 1'-0"

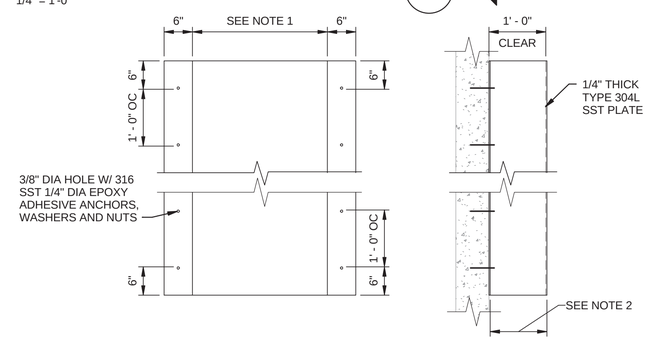

FRONT ELEVATION

SIDE ELEVATION

NOTES:
1. INSIDE DIMENSION SHALL EXCEED WIDTH OF SLIDE GATE SG-1 FRAME BY 6". CENTER BAFFLE HORIZONTALLY ON SG-1.
2. INSIDE DIMENSION SHALL BE 12", FROM FACE OF CONCRETE WALL TO INSIDE FACE OF BAFFLE PLATE.

1 SBR INFLUENT BAFFLE DETAIL

3/4" = 1'-0"

GENERAL SHEET NOTES:

1 NOT ALL PIPE SUPPORTS ARE SHOWN.

2 EQUIPMENT LAYOUT, DIMENSIONS, ELEVATIONS AND LOCATIONS SHALL COMPLY WITH EQUIPMENT MANUFACTURER'S RECOMMENDATIONS AND APPROVED SHOP DRAWINGS.

3 PROVIDE SUBMERSIBLE PUMPS AS SHOWN.

SHEET KEYNOTES:

1 PROVIDED BY SBR EQUIPMENT MANUFACTURER.

2 COORDINATE EXACT LOCATIONS AND DIMENSIONS IN SHOP DRAWINGS.

3 COORDINATE EXACT LOCATION WITH SCREEN MANUFACTURER AND SUBMIT TO ENGINEER FOR APPROVAL.

4 PROVIDE 1 1/2" GROUT PAD.

STATE OF OHIO JAMES R. GAGNON E-66893 REGISTERED PROFESSIONAL ENGINEER 3/17

NO.	DATE	REVISION	BY	APVD
DSGN	J. GAGNON	DR J. BRADLEY	CHK T BECHTEL	APVD J GAGNON

©CH2M HILL 2014. ALL RIGHTS RESERVED.

REUSE OF DOCUMENTS: THIS DOCUMENT, AND THE IDEAS AND DESIGNS INCORPORATED HEREIN, AS AN INSTRUMENT OF PROFESSIONAL SERVICE, IS THE PROPERTY OF CH2M HILL AND IS NOT TO BE USED, IN WHOLE OR IN PART, FOR ANY OTHER PROJECT WITHOUT THE WRITTEN AUTHORIZATION OF CH2M HILL.

Clermont County

VILLAGE OF NEWTONSVILLE
WASTEWATER TREATMENT PLANT & COLLECTION SYSTEM - PART A
CLERMONT COUNTY WATER RESOURCES DEPARTMENT, CLERMONT COUNTY, OHIO

ch2m

PROCESS/MECHANICAL

SCREEN/SEQUENCING BATCH REACTOR PLANS

BID READY

As indicated

VERIFY SCALE

BAR IS ONE INCH ON ORIGINAL DRAWING 0 1"

DATE	2017-03-31
PROJ	665163
DWG	D-004
SHEET	41 of 91

R:\d0478245\020-D-ZGAN01_665163.rvt

FILENAME:

PLOT DATE/TIME: 4/2/2017 7:13:27 PM

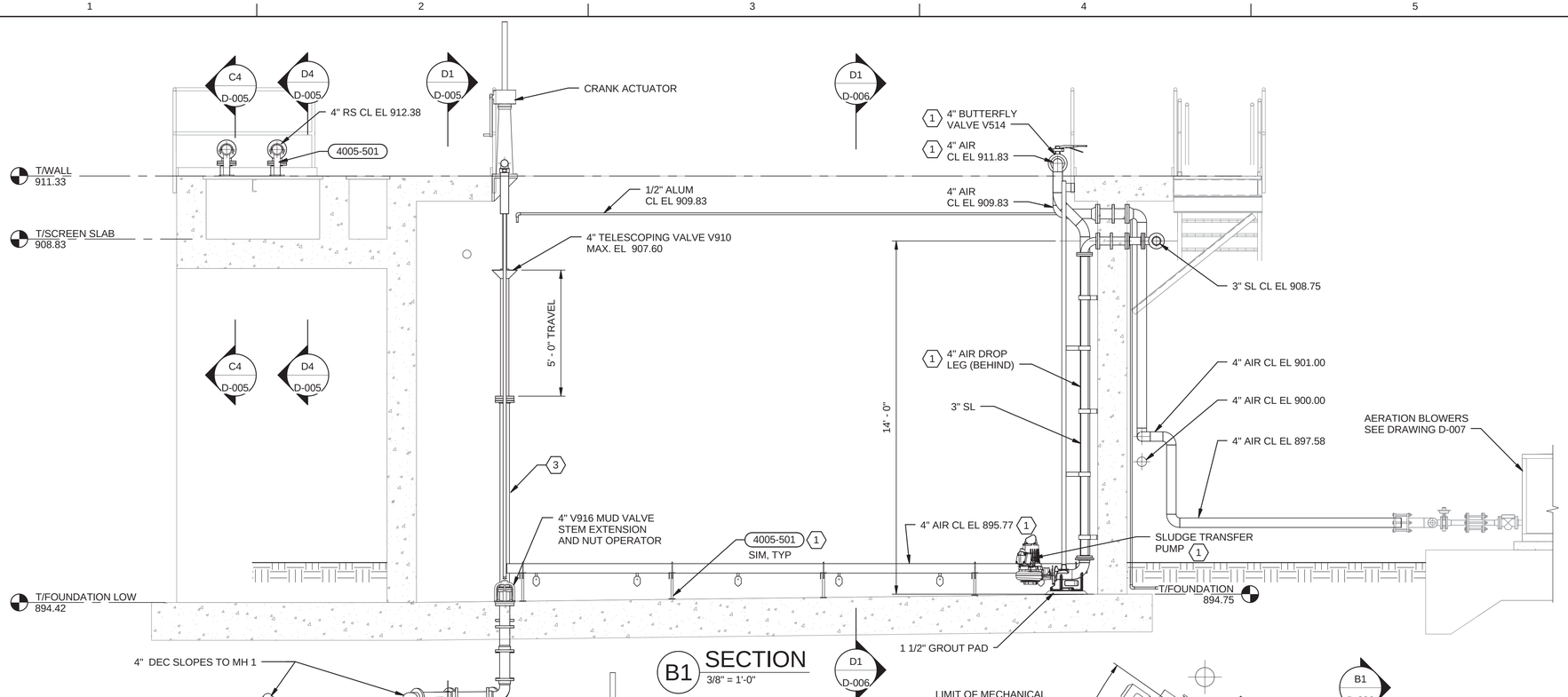

B1 SECTION
3/8" = 1'-0"
D-004

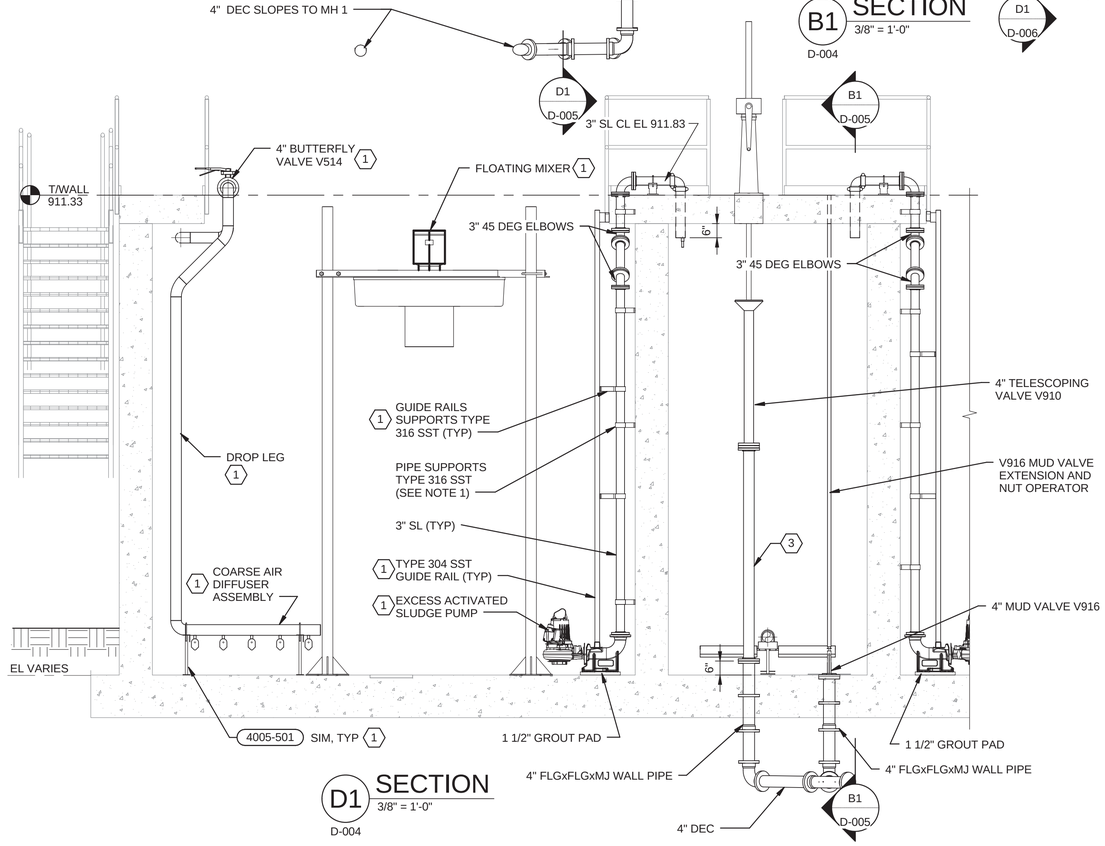

D1 SECTION
3/8" = 1'-0"
D-004

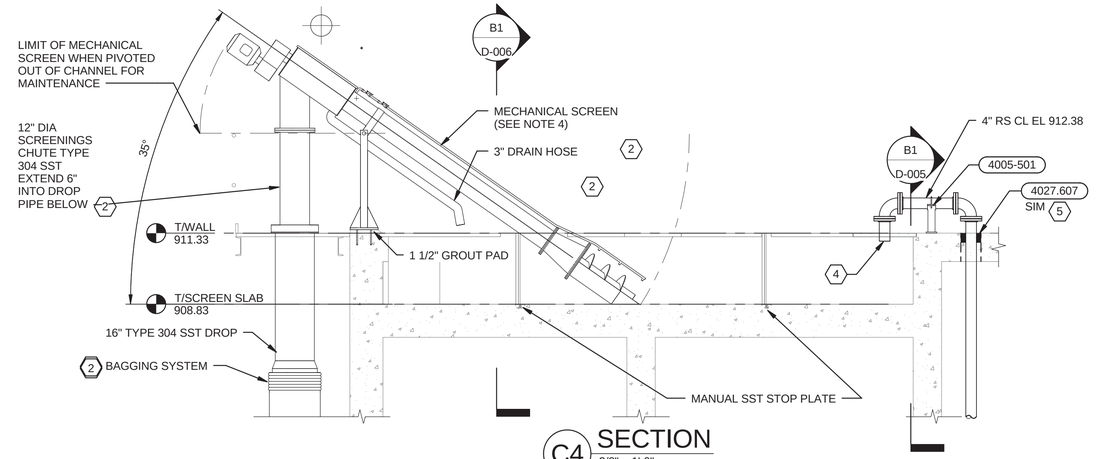

C4 SECTION
3/8" = 1'-0"
D-004

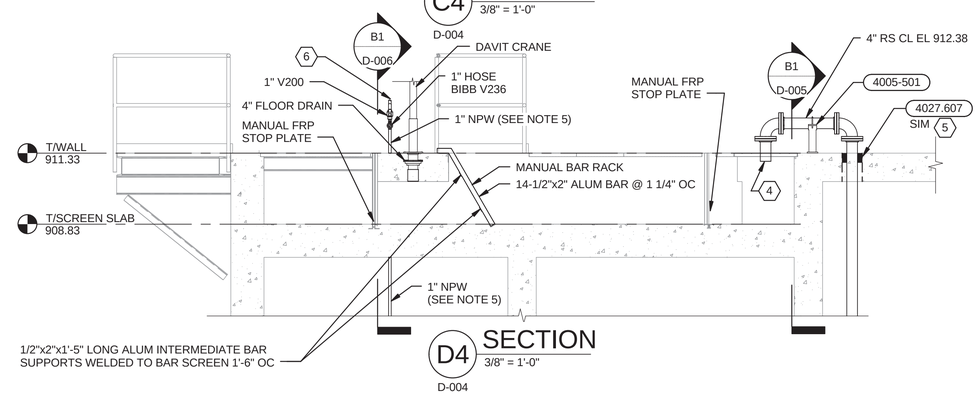

D4 SECTION
3/8" = 1'-0"
D-004

GENERAL SHEET NOTES:

1. NOT ALL PIPE SUPPORTS ARE SHOWN.
2. EQUIPMENT LAYOUT, DIMENSIONS, ELEVATIONS AND LOCATIONS SHALL COMPLY WITH EQUIPMENT MANUFACTURER'S RECOMMENDATIONS AND APPROVED SHOP DRAWINGS.
3. PROVIDE SUBMERSIBLE PUMPS AS SHOWN.
4. WEATHER PROTECTION NOT SHOWN FOR CLARITY.
5. ALL NPW PIPING AND VALVES SHALL BE HEAT TRACED AND INSULATED. REFER TO AND COMPLY WITH SECTION 40 05 33.

SHEET KEYNOTES:

1. PROVIDED BY SBR EQUIPMENT MANUFACTURER.
2. PROVIDED BY MECHANICAL SCREEN MANUFACTURER.
3. RISER PIPE SHALL BE UNLINED DUCTILE IRON.
4. TERMINATE PIPE 2" BELOW UNDERSIDE OF GRATING.
5. PLACE MODULAR MECHANICAL SEAL AT TOP OF PENETRATION.
6. FIELD ROUTE TO SCREEN WASH WATER CONNECTION. PROVIDE FLEXIBLE CONNECTOR TO ACCOMMODATE ROTATION OF SCREEN WITHOUT DISCONNECTING NPW LINE.

STATE OF OHIO JAMES R. GAGNON E-66893 REGISTERED PROFESSIONAL ENGINEER 3/17

NO.	DATE	REVISION	BY	APVD
DSGN	J. GAGNON	DR J.BRADLEY	CHK T BECHTEL	APVD J GAGNON

©CH2M HILL 2014. ALL RIGHTS RESERVED.
REUSE OF DOCUMENTS: THIS DOCUMENT, AND THE IDEAS AND DESIGNS INCORPORATED HEREIN, AS AN INSTRUMENT OF PROFESSIONAL SERVICE, IS THE PROPERTY OF CH2M HILL AND IS NOT TO BE USED, IN WHOLE OR IN PART, FOR ANY OTHER PROJECT WITHOUT THE WRITTEN AUTHORIZATION OF CH2M HILL.

Clermont County

VILLAGE OF NEWTONSVILLE
WASTEWATER TREATMENT PLANT & COLLECTION SYSTEM - PART A
CLERMONT COUNTY WATER RESOURCES DEPARTMENT, CLERMONT COUNTY, OHIO

ch2m

PROCESS/MECHANICAL

SCREEN/SEQUENCING BATCH REACTOR SECTIONS AND DETAILS 1

3/8" = 1'-0"
VERIFY SCALE
BAR IS ONE INCH ON ORIGINAL DRAWING
0 1"

DATE	2017-03-31
PROJ	665163
DWG	D-005
SHEET	42 of 91

BID READY

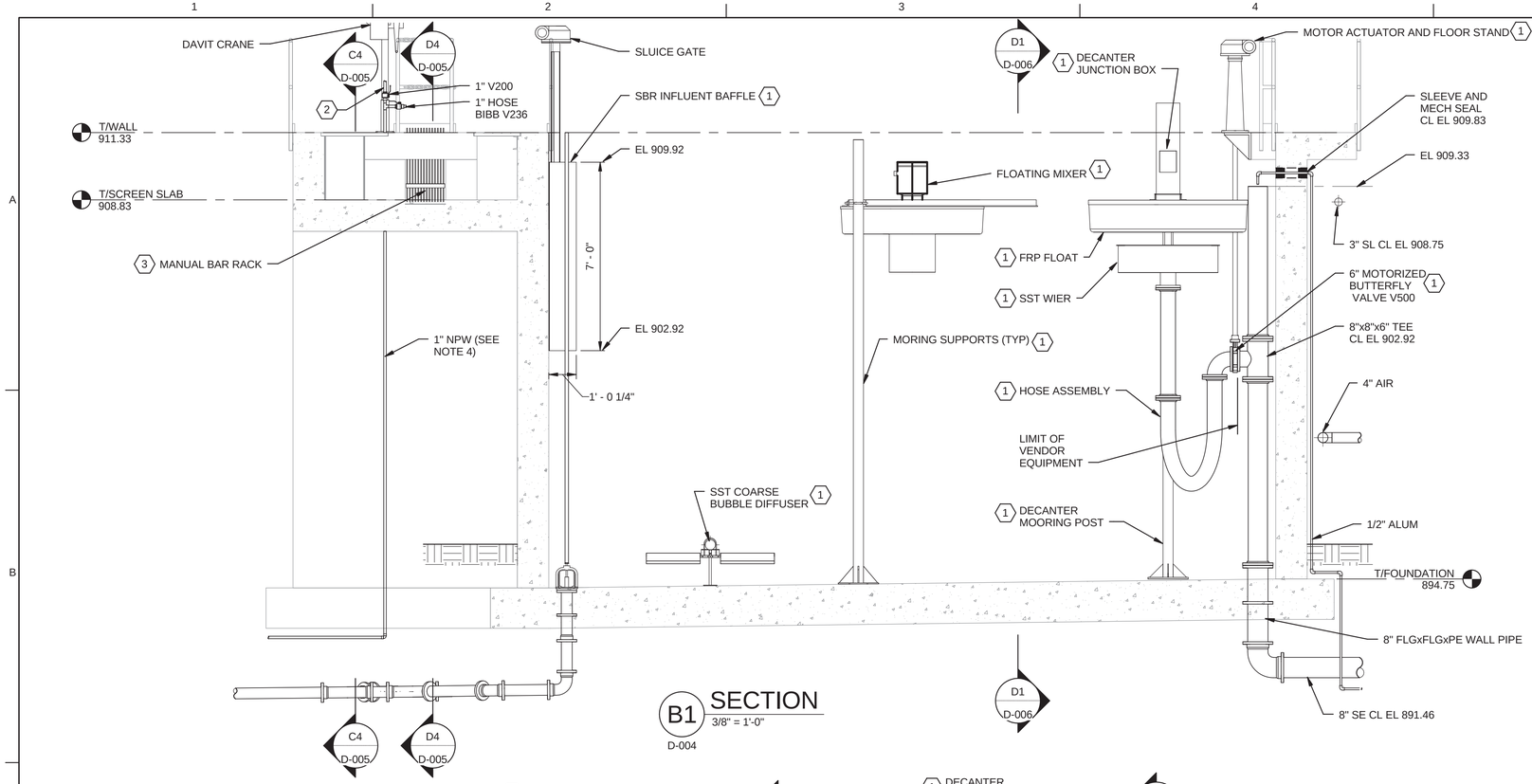

B1 SECTION
3/8" = 1'-0"
D-004

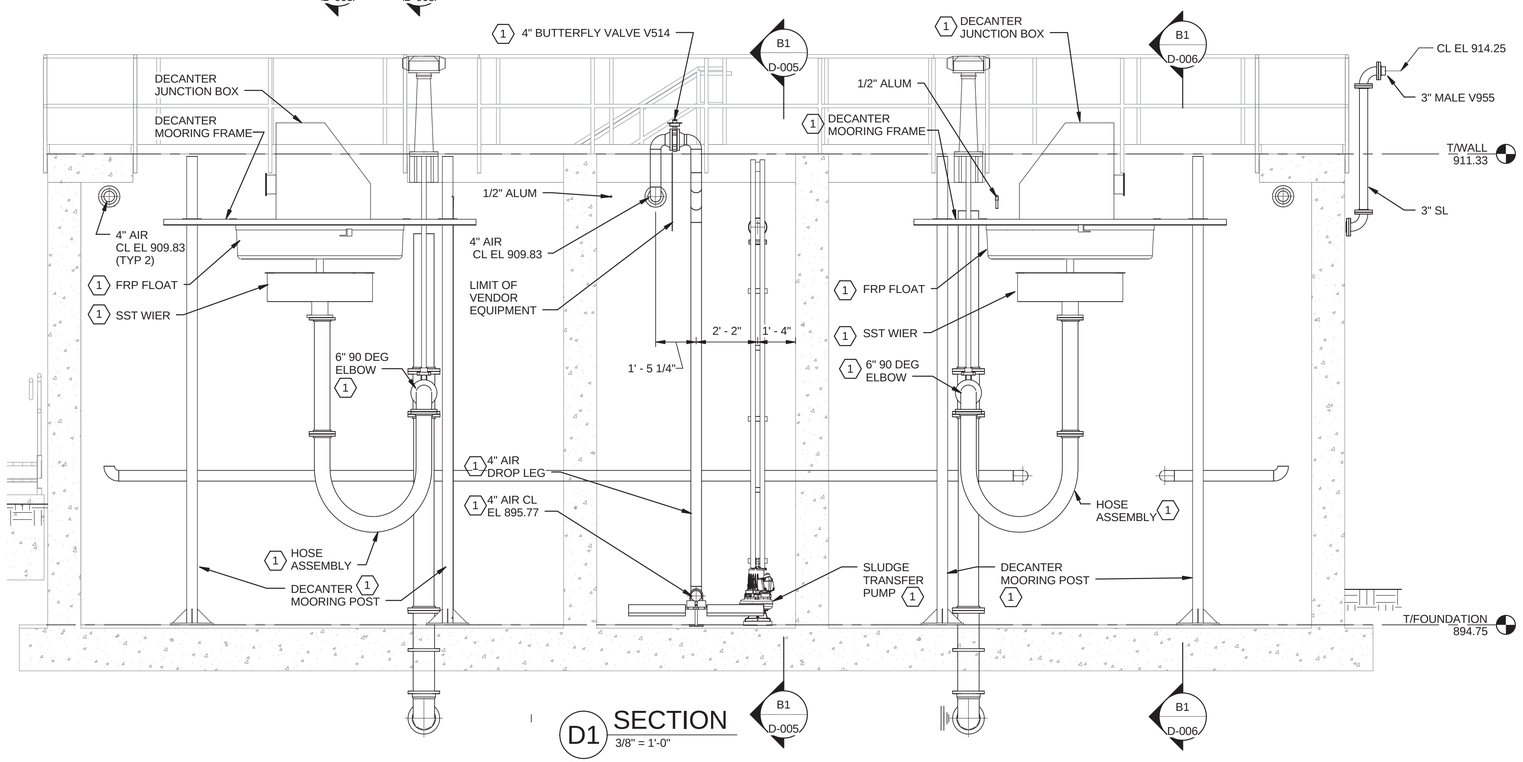

D1 SECTION
3/8" = 1'-0"
D-004

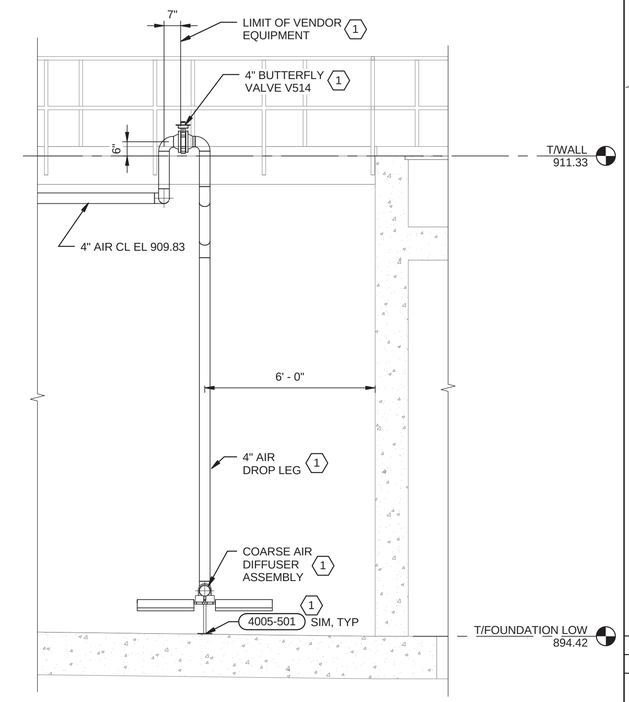

D5 SECTION
3/8" = 1'-0"
D-004

GENERAL SHEET NOTES:

1. NOT ALL PIPE SUPPORTS ARE SHOWN.
2. EQUIPMENT LAYOUT, DIMENSIONS, ELEVATIONS AND LOCATIONS SHALL COMPLY WITH EQUIPMENT MANUFACTURER'S RECOMMENDATIONS AND APPROVED SHOP DRAWINGS.
3. PROVIDE SUBMERSIBLE PUMPS AS SHOWN.
4. ALL NPW PIPING AND VALVES SHALL BE HEAT TRACED AND INSULATED. REFER TO AND COMPLY WITH SECTION 40 05 33.

SHEET KEYNOTES:

1. PROVIDED BY SBR EQUIPMENT MANUFACTURER.
2. FIELD ROUTE TO SCREEN WASH WATER CONNECTION. PROVIDE FLEXIBLE CONNECTOR TO ACCOMMODATE ROTATION OF SCREEN WITHOUT DISCONNECTING NPW LINE.
3. SEE SECTION D4 ON DWG D-005 FOR CONSTRUCTION.

STATE OF OHIO
JAMES R. GAGNON
E-66893
REGISTERED
PROFESSIONAL ENGINEER
3/17

NO.	DATE	REVISION	BY	APVD

DSGN	DR	CHK	APVD
J. GAGNON	J. BRADLEY	T BECHTEL	J GAGNON

©CH2M HILL 2014. ALL RIGHTS RESERVED.

REUSE OF DOCUMENTS: THIS DOCUMENT, AND THE IDEAS AND DESIGNS INCORPORATED HEREIN, AS AN INSTRUMENT OF PROFESSIONAL SERVICE, IS THE PROPERTY OF CH2M HILL AND IS NOT TO BE USED, IN WHOLE OR IN PART, FOR ANY OTHER PROJECT WITHOUT THE WRITTEN AUTHORIZATION OF CH2M HILL.

Clermont County

VILLAGE OF NEWTONSVILLE
WASTEWATER TREATMENT PLANT & COLLECTION SYSTEM - PART A
CLERMONT COUNTY WATER RESOURCES DEPARTMENT, CLERMONT COUNTY, OHIO

ch2m

PROCESS/MECHANICAL

SCREEN/SEQUENCING REACTOR SECTIONS & DETAILS 2

3/8" = 1'-0"
VERIFY SCALE
BAR IS ONE INCH ON ORIGINAL DRAWING
0 1"

DATE	2017-03-31
PROJ	665163
DWG	D-006
SHEET	43 of 91

BID READY

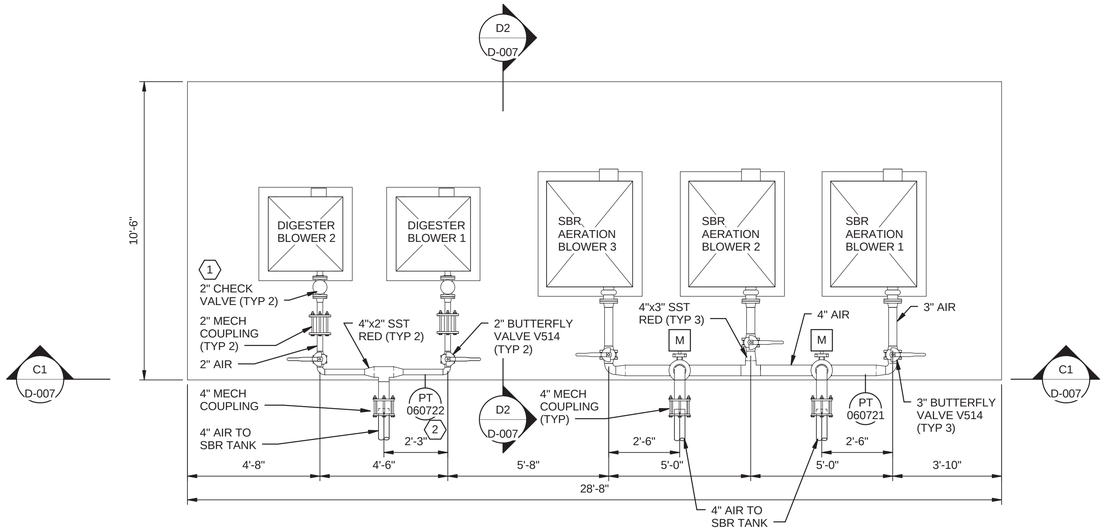

BLOWER PLAN

3/8" = 1'-0"

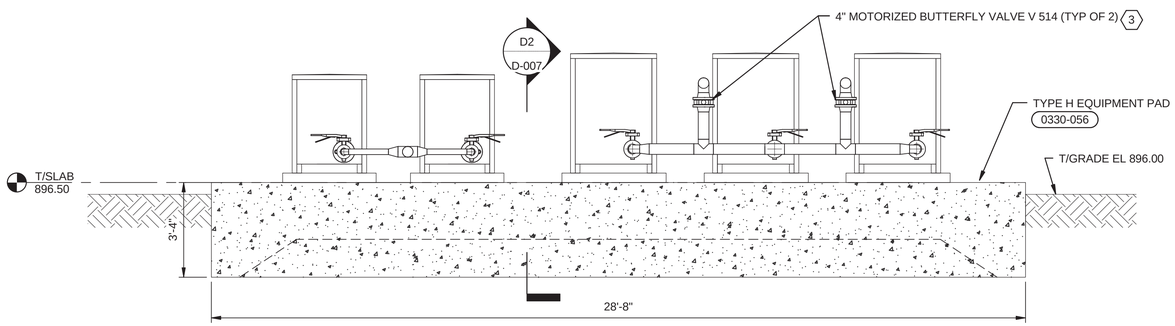

C1 SECTION

3/8" = 1'-0"

D-007

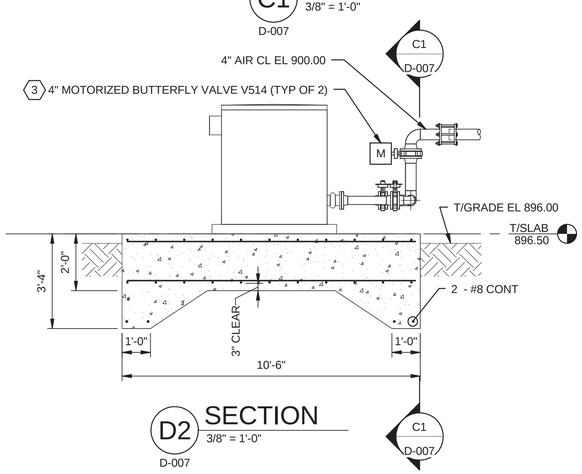

D2 SECTION

3/8" = 1'-0"

D-007

GENERAL SHEET NOTES:

1. REFER TO SHEETS S-001 AND S-002 FOR STRUCTURAL GENERAL NOTES AND S-008 THRU S-016 FOR TYPICAL DETAILS.
2. REFER TO CIVIL SITE DRAWINGS FOR EQUIPMENT PAD LOCATION AND SITE ELEVATIONS.
3. REFER TO PROCESS MECHANICAL DRAWINGS FOR EQUIPMENT LOCATION AND ADDITIONAL INFORMATION.
4. ATTACHMENT OF BLOWERS, PIPING AND PIPE SUPPORTS TO EQUIPMENT PAD BY CONTRACTOR.

SHEET KEYNOTES:

1 PROVIDED BY BLOWER MANUFACTURER
2 PRESSURE TRANSMITTER. REFER TO DWG IC-006.
3 PROVIDED BY SBR EQUIPMENT MANUFACTURER.

STATE OF OHIO
JAMES R. GAGNON
E-66893
REGISTERED
PROFESSIONAL ENGINEER
3/31/17

NO.	DATE	REVISION	BY	APVD

DSGN	DR	CHK	APVD
J. GAGNON	J. BRADLEY	T BECHTEL	J GAGNON

©CH2M HILL 2014. ALL RIGHTS RESERVED.

REUSE OF DOCUMENTS: THIS DOCUMENT, AND THE IDEAS AND DESIGNS INCORPORATED HEREIN, AS AN INSTRUMENT OF PROFESSIONAL SERVICE, IS THE PROPERTY OF CH2M HILL AND IS NOT TO BE USED, IN WHOLE OR IN PART, FOR ANY OTHER PROJECT WITHOUT THE WRITTEN AUTHORIZATION OF CH2M HILL.

Clermont County

VILLAGE OF NEWTONSVILLE
WASTEWATER TREATMENT PLANT & COLLECTION SYSTEM - PART A
CLERMOUNT COUNTY WATER RESOURCES DEPARTMENT, CLERMONT COUNTY, OHIO

ch2m

PROCESS/MECHANICAL

AERATION BLOWER PLAN, SECTION AND DETAILS

3/8" = 1'-0"

VERIFY SCALE

BAR IS ONE INCH ON ORIGINAL DRAWING
0 1"

DATE	2017-03-31
PROJ	665163
DWG	D-007
SHEET	44 of 91

BID READY

GENERAL SHEET NOTES:

1. NOT ALL PIPE SUPPORTS ARE SHOWN.
2. EQUIPMENT LAYOUT, DIMENSIONS, ELEVATIONS AND LOCATIONS SHALL COMPLY WITH EQUIPMENT MANUFACTURER'S RECOMMENDATIONS AND APPROVED SHOP DRAWINGS.
3. WHERE SHOWN, DRAIN LINES SHALL BE FIELD ROUTED TO HUB DRAINS.
4. MJ CONNECTIONS UNDER THE BUILDING SHALL BE RESTRAINED.
5. ALL CHEMICAL, NPW AND WATER PIPING SHALL BE FIELD ROUTED (UNLESS OTHERWISE SHOWN) AND SHALL BE 8'-0" AFF IN PERSONEL AREAS.
6. UNLESS NOTED OTHERWISE, ALUM PVC PIPING SHALL BE SCH 40.
7. ALUM STORAGE AREA SHALL BE COATED IN ACCORDANCE WITH SECTION 09 90 00. ALL SURFACES INSIDE CONCRETE CURB SHALL BE COATED UP TO AND INCLUDING TOP OF CURB. PROVIDE A 2" 45 DEG CANT COVE AT THE INTERFACE OF ALL FLAT CONCRETE SURFACES WITHIN THE STORAGE AREA
8. FIELD ROUTE REFRIGERANT PIPING IN ACCORDANCE WITH SECTION 23 81 00.

SHEET KEYNOTES:

1. SIZE PER FILL VALVE ON BREAK TANK SYSTEM SKID.
2. PROVIDE 2" V200 AT CONNECTION TO TANK.
3. PROVIDE 3 WAY ANGLE STOP VALVE (KEENEY MFG. CO, OR EQUAL) AND CONNECT TO ON DEMAND WATER HEATER PER MANUFACTURER'S RECOMMENTATIONS.
4. OPTIONAL, DEPENDING ON UV EQUIPMENT MANUFACTURER. REFER TO AND COMPLY WITH SECTION 46 66 21.
5. SIZE PER UV EQUIPMENT CONNECTION.
6. FIELD ROUTE PRESSURE RELIEF FROM ALUM FEED PUMP SKID TO ALUM STORAGE TANK. SIZE PER ALUM FEED PUMP SKID MANUFACTURER. PROVIDE BUSHING AT ALUM STORAGE TANK AS NECESSARY.
7. TERMINATE OVERFLOW WITH PLAIN END AT EL 896.50.
8. CEILING MOUNTED. REFER TO AND COMPLY WITH SECTION 23 81 00. OA DUCTWORK (NOT SHOWN FOR CLARITY) ROUTED ABOVE CEILING TO WALL CAP (SEE DWG. AS-02 FOR GENERAL LOCATION). ROUTE CONDENSATE DRAIN ABOVE CEILING, CORE THRU CMU WALL, PENETRATE EXTERIOR WALL 1'-0" ABOVE CONCRETE CURB AND SEAL PER PEMB MANUFACTURER, AND DISCHARGE TO SPLASH BLOCK.
9. CEILING MOUNTED EXHAUST FAN. REFER TO AND COMPLY WITH SECTION 23 34 00. OA DUCTWORK (NOT SHOWN FOR CLARITY) SHALL COMPLY WITH SECTION 23 81 00. ROUTE OA DUCT WORK ABOVE CEILING TO WALL CAP (SEE DWG AS-02 FOR GENERAL LOCATION).

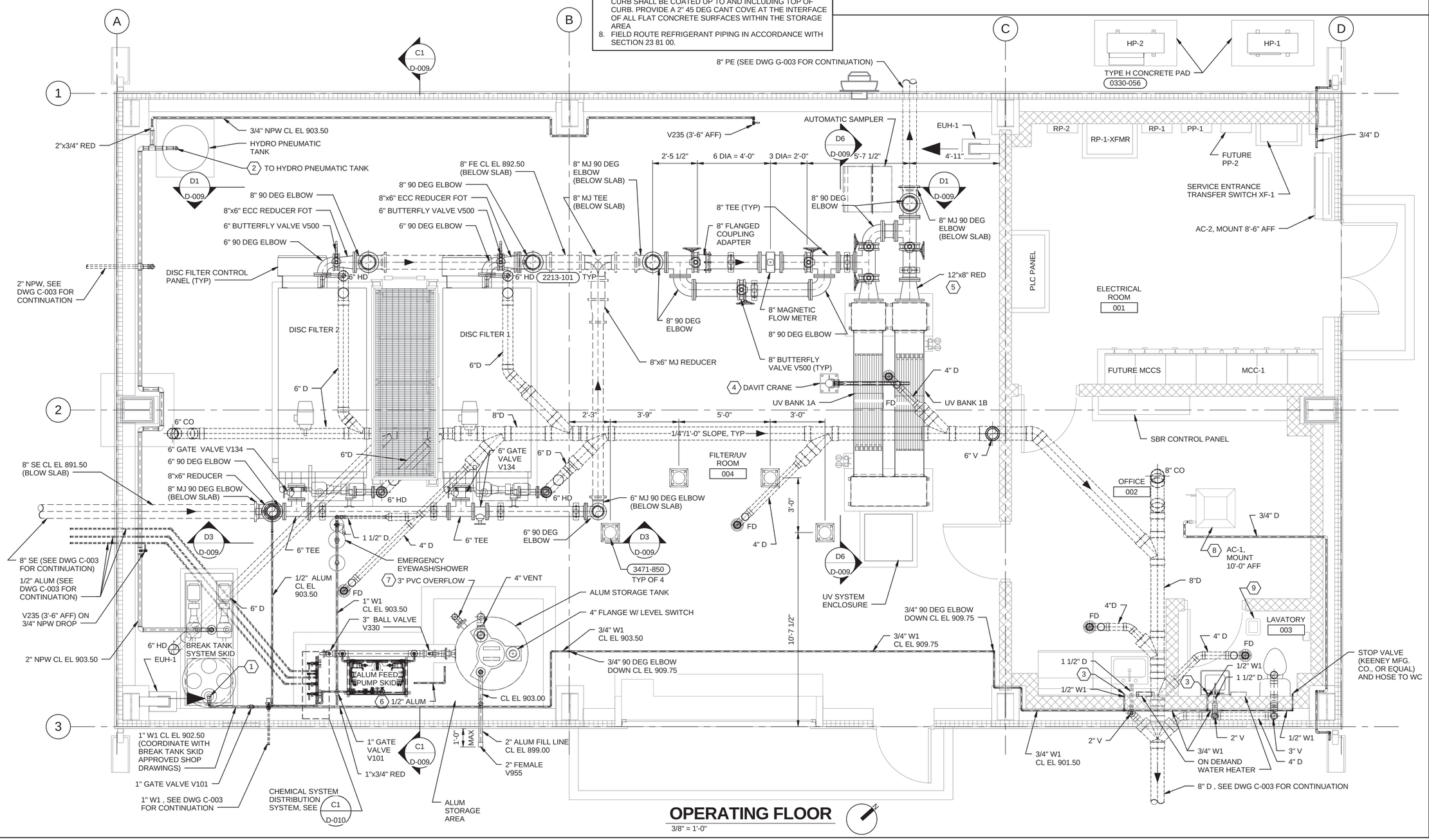

OPERATING FLOOR

3/8" = 1'-0"

NO.	DATE	DR	REVISION	CHK	APVD	BY	APVD
DSGN	J. GAGNON	J. BRADLEY		T. BECHTEL		J. GAGNON	

STATE OF OHIO — JAMES R. GAGNON — E-66893 — REGISTERED PROFESSIONAL ENGINEER — 3/17

©CH2M HILL 2014. ALL RIGHTS RESERVED.

REUSE OF DOCUMENTS: THIS DOCUMENT, AND THE IDEAS AND DESIGNS INCORPORATED HEREIN, AS AN INSTRUMENT OF PROFESSIONAL SERVICE, IS THE PROPERTY OF CH2M HILL AND IS NOT TO BE USED, IN WHOLE OR IN PART, FOR ANY OTHER PROJECT WITHOUT THE WRITTEN AUTHORIZATION OF CH2M HILL.

Clermont County

VILLAGE OF NEWTONSVILLE
WASTEWATER TREATMENT PLANT & COLLECTION SYSTEM - PART A
CLERMONT COUNTY WATER RESOURCES DEPARTMENT, CLERMONT COUNTY, OHIO

ch2m

PROCESS/MECHANICAL

TERTIARY FILTRATION & DISINFECTION BUILDING PLAN

3/8" = 1'-0"

VERIFY SCALE

BAR IS ONE INCH ON ORIGINAL DRAWING (0 — 1")

DATE	2017-03-31
PROJ	665163
DWG	D-008
SHEET	45 of 91

BID READY

GENERAL SHEET NOTES:

1. NOT ALL PIPE SUPPORTS ARE SHOWN.
2. EQUIPMENT LAYOUT, DIMENSIONS, ELEVATIONS AND LOCATIONS SHALL COMPLY WITH EQUIPMENT MANUFACTURER'S RECOMMENDATIONS AND APPROVED SHOP DRAWINGS.
3. WHERE SHOWN, DRAIN LINES SHALL BE FIELD ROUTED TO HUB DRAINS.
4. MJ CONNECTIONS UNDER THE BUILDING SHALL BE RESTRAINED.
5. ALL CHEMICAL, NPW, WATER, AND COMPRESSED AIR (IF PROVIDED) PIPING SHALL BE FIELD ROUTED (UNLESS OTHERWISE SHOWN) AND SHALL BE AT LEAST 8'-0" AFF IN PERSONNEL AREAS.
6. UNLESS NOTED OTHERWISE, ALUM PVC PIPE SHALL BE SCH 40.

SHEET KEYNOTES:

1. TERMINATE VENT WITH PLAIN END 1'-0" ABOVE TOP OF DISC FILTER TANK.
2. PROVIDE ELBOW WITH INTEGRAL BOSS FOR VENT TAP.
3. OPTIONAL, DEPENDING ON UV EQUIPMENT MANUFACTURER. REFER TO AND COMPLY WITH SECTION 46 66 21.
4. COORDINATE WITH EQUIPMENT MANUFACTURER TO SET WEIR ELEVATION AS SHOWN ON DWG D-002.

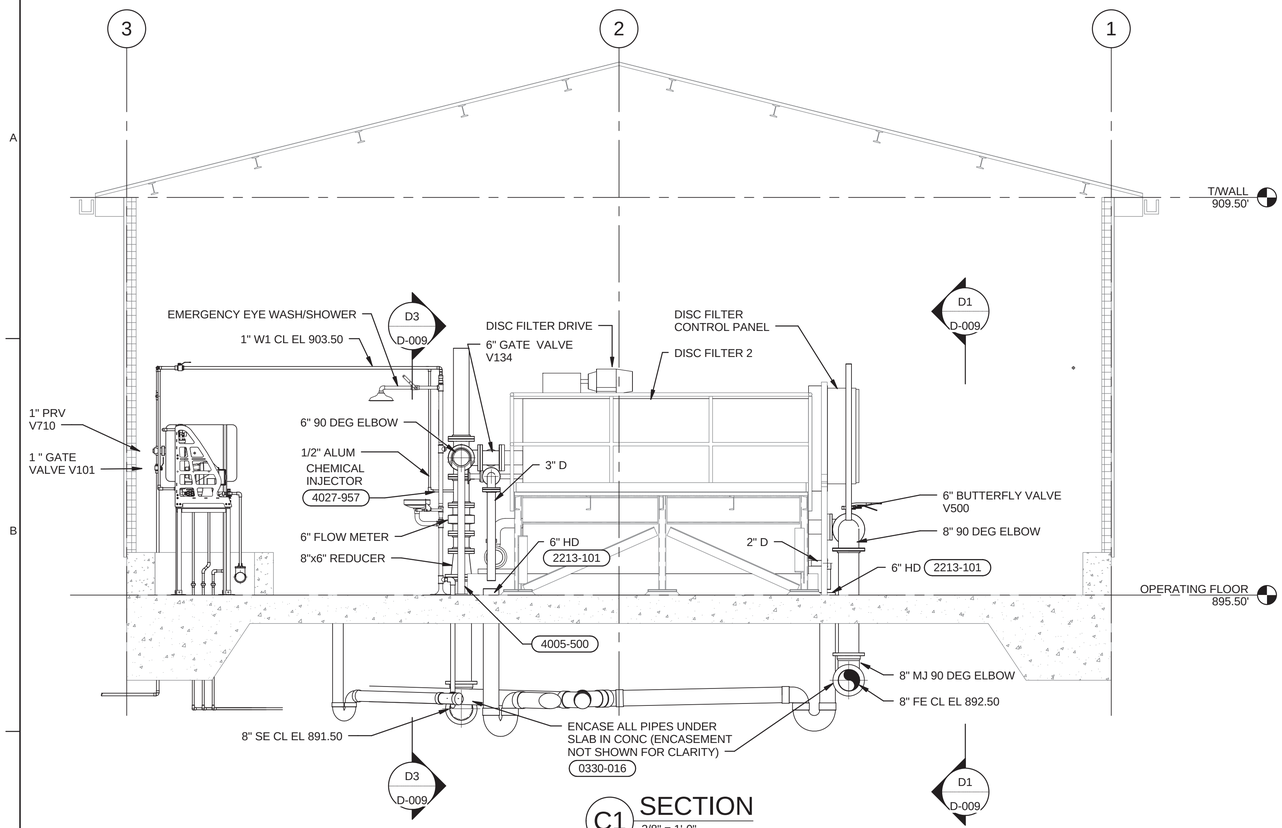

C1 SECTION
3/8" = 1'-0"
D-008

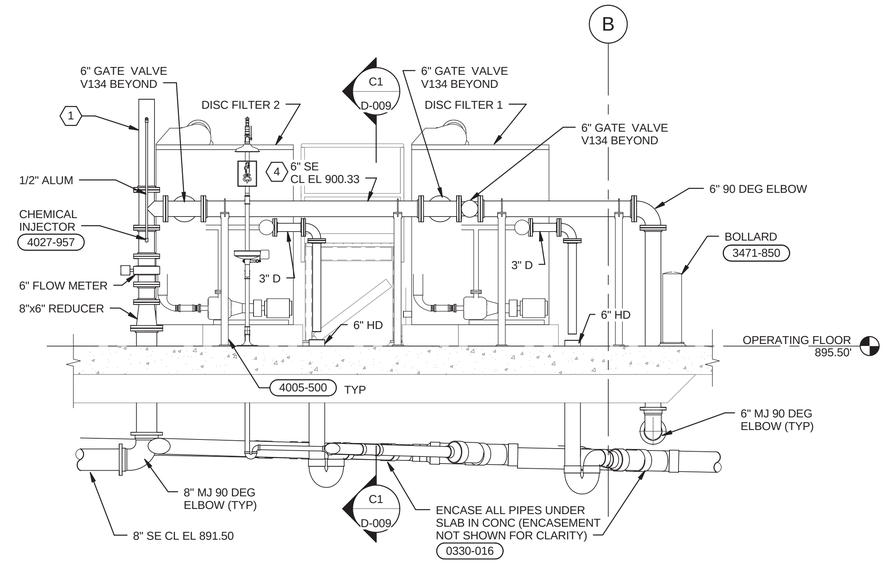

D3 SECTION
3/8" = 1'-0"
D-008

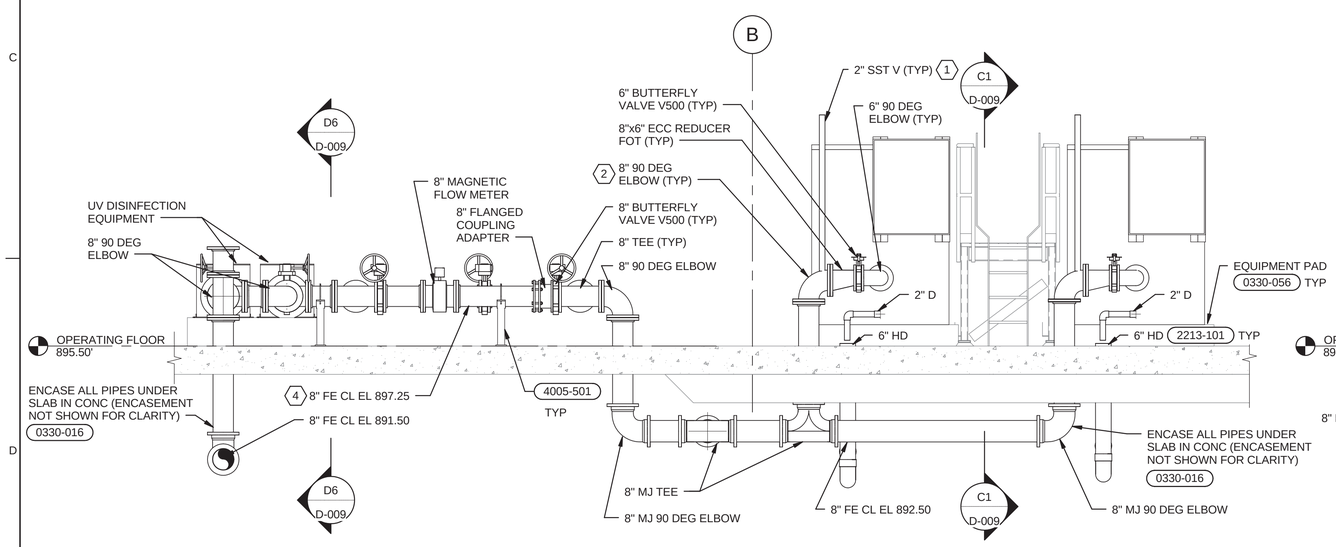

D1 SECTION
3/8" = 1'-0"
D-008

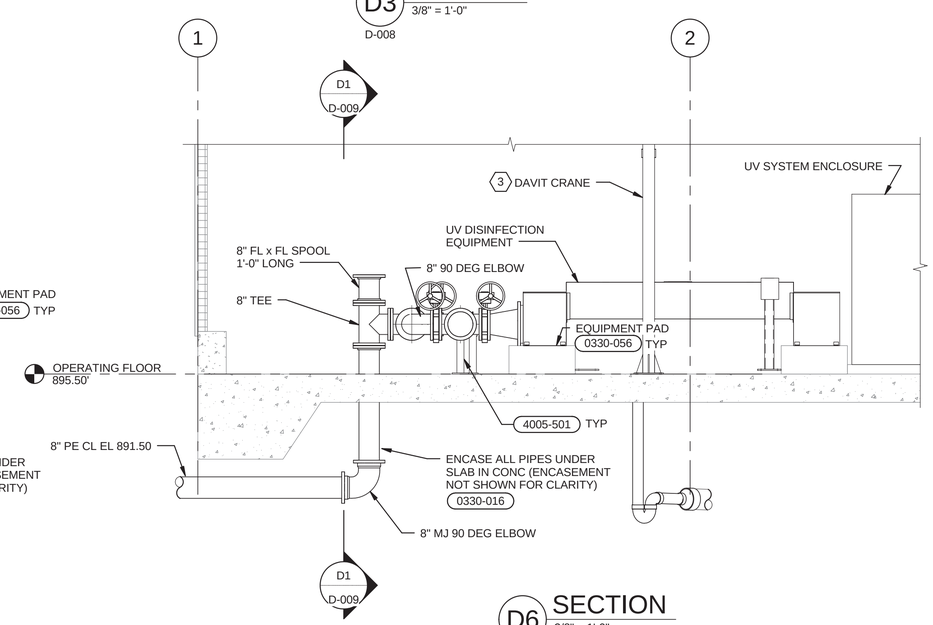

D6 SECTION
3/8" = 1'-0"
D-008

STATE OF OHIO
JAMES R. GAGNON
E-66893
REGISTERED PROFESSIONAL ENGINEER
3/31/17

NO.	DATE	DR	REVISION	CHK	APVD	BY	APVD
DSGN	J. GAGNON	J BRADLEY		T BECHTEL		J GAGNON	

©CH2M HILL 2014. ALL RIGHTS RESERVED.

Clermont County

VILLAGE OF NEWTONSVILLE
WASTEWATER TREATMENT PLANT & COLLECTION SYSTEM - PART A
CLERMONT COUNTY WATER RESOURCES DEPARTMENT, CLERMONT COUNTY, OHIO

REUSE OF DOCUMENTS: THIS DOCUMENT, AND THE IDEAS AND DESIGNS INCORPORATED HEREIN, AS AN INSTRUMENT OF PROFESSIONAL SERVICE, IS THE PROPERTY OF CH2M HILL AND IS NOT TO BE USED, IN WHOLE OR IN PART, FOR ANY OTHER PROJECT WITHOUT THE WRITTEN AUTHORIZATION OF CH2M HILL.

ch2m

PROCESS/MECHANICAL

TERTIARY FILTRATION & DISINFECTION BUILDING SECTIONS

3/8" = 1'-0"
VERIFY SCALE
BAR IS ONE INCH ON ORIGINAL DRAWING
0 1"

DATE	2017-03-31
PROJ	665163
DWG	D-009
SHEET	46 of 91

BID READY

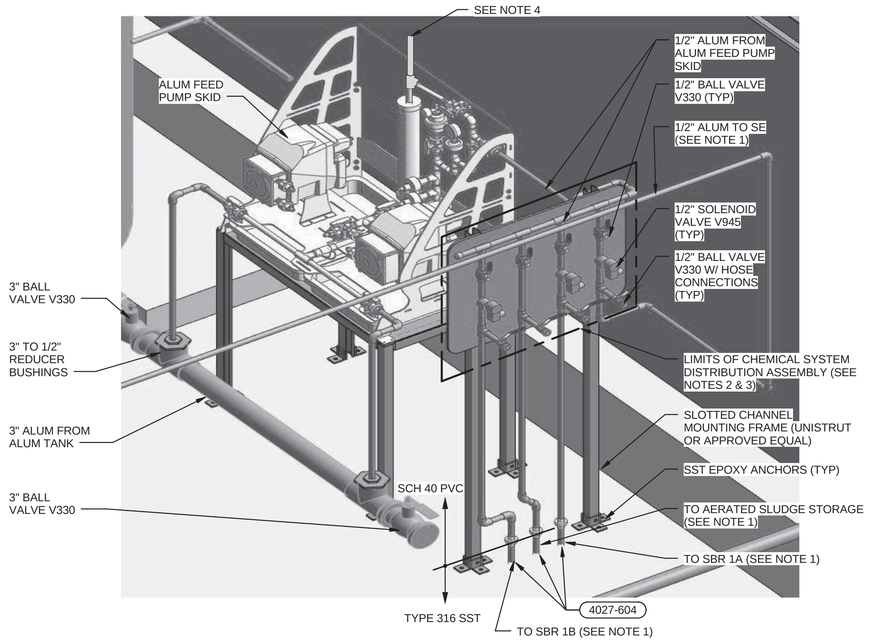

NOTES:
1. REFER TO DRAWING D-008 FOR CONTINUATION.
2. ASSEMBLY SHALL BE 3'-6" WIDE MAXIMUM. TOP OF ASSEMBLY SHALL BE 72" A.F.F. MAXIMUM.
3. PROVIDE 1/4" THICK PVC SHEET FOR MOUNTING ASSEMBLY TO FRAME AND FOR SUPPORT OF CHEMICAL PIPING AND VALVES.
4. TERMINATE CALIBRATION COLUMN VENT MINIMUM 1'-0" ABOVE TOP OF ALUM STORAGE TANK. SIZE PER ALUM FEED PUMP SKID MANUFACTURER.
5. UNLESS NOTED OTHERWISE, ALUM PVC SHALL BE SCH 40.

C1 CHEMICAL SYSTEM DISTRIBUTION ASSEMBLY

NTS

STATE OF OHIO JAMES R. GAGNON E-66893 REGISTERED PROFESSIONAL ENGINEER 3/17

NO.	DATE	REVISION	BY	APVD

DSGN J GAGNON | DR J BRADLEY | CHK T BECHTEL | APVD J GAGNON

©CH2M HILL 2014. ALL RIGHTS RESERVED.

REUSE OF DOCUMENTS: THIS DOCUMENT, AND THE IDEAS AND DESIGNS INCORPORATED HEREIN, AS AN INSTRUMENT OF PROFESSIONAL SERVICE, IS THE PROPERTY OF CH2M HILL AND IS NOT TO BE USED, IN WHOLE OR IN PART, FOR ANY OTHER PROJECT WITHOUT THE WRITTEN AUTHORIZATION OF CH2M HILL.

Clermont County

VILLAGE OF NEW/TONSVILLE
WASTEWATER TREATMENT PLANT & COLLECTION SYSTEM - PART A
CLERMOUNT COUNTY WATER RESOURCES DEPARTMENT, CLERMONT COUNTY, OHIO

ch2m

PROCESS/MECHANICAL

TERTIARY FILTRATION & DISINFECTION BUILDING DETAILS

3/8" = 1'-0"

VERIFY SCALE

BAR IS ONE INCH ON ORIGINAL DRAWING
0 1"

DATE	2017-03-31
PROJ	665163
DWG	D-010
SHEET	47 of 91

BID READY

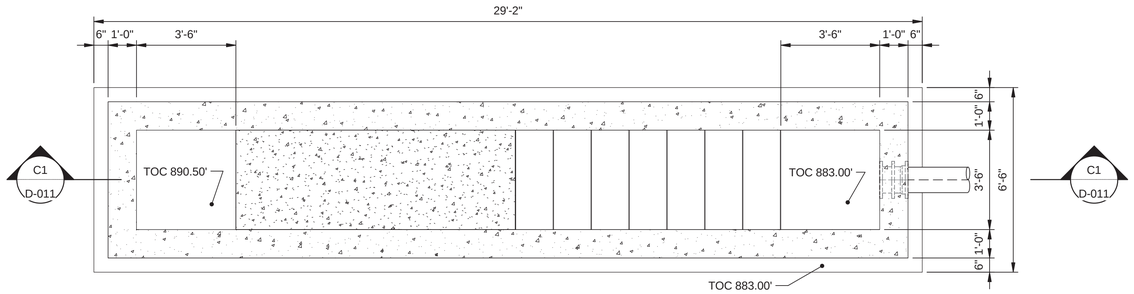

PLAN AT EL 890.50

3/8" = 1'-0"

N

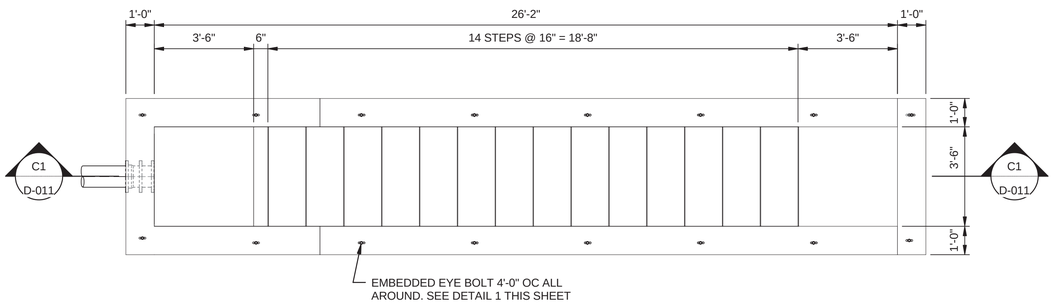

PLAN AT EL 898.50

3/8" = 1'-0"

N

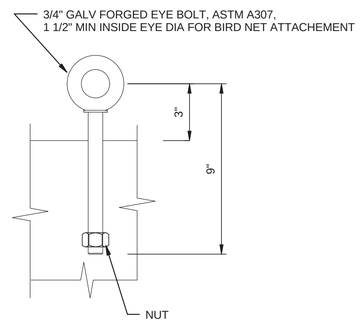

1 EYE BOLT DETAIL

3" = 1'-0"

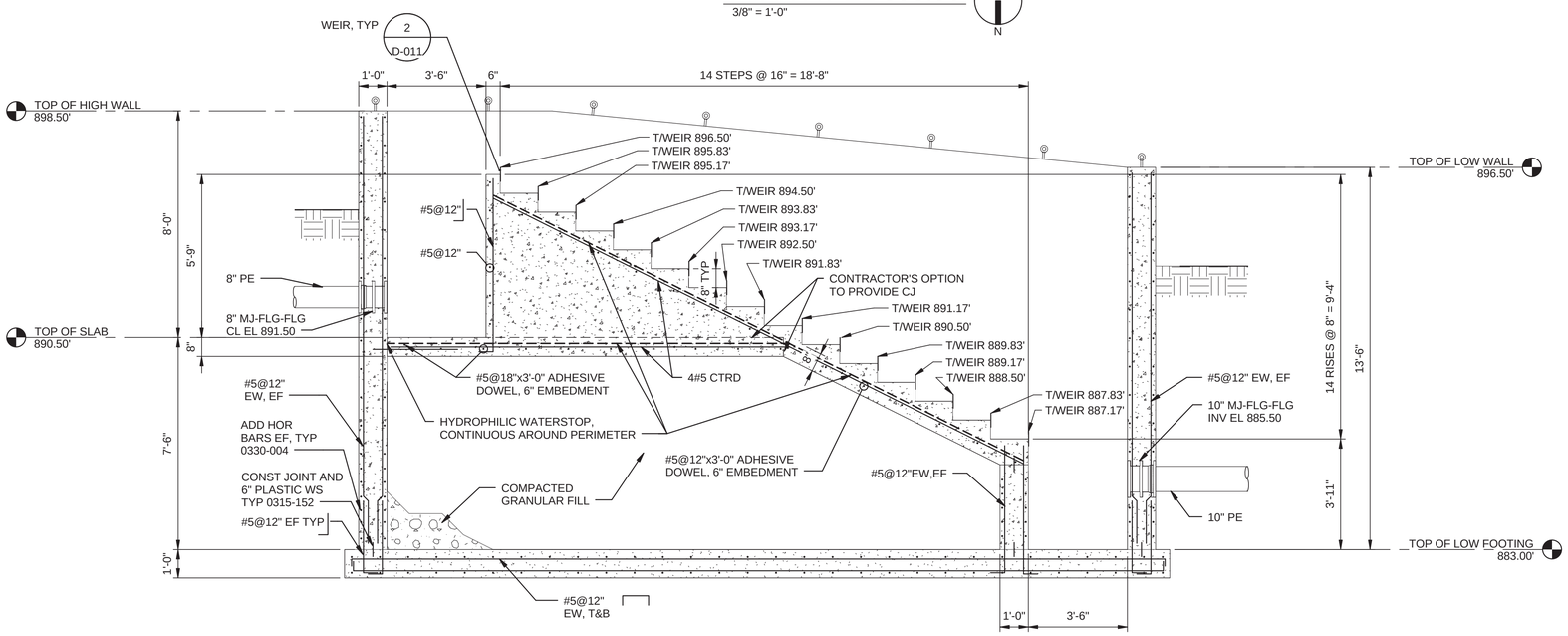

C1 SECTION

3/8" = 1'-0"

D-011

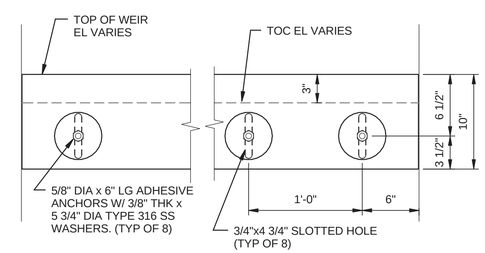

NOTES:

1. WEIR PLATE SHALL BE 3/8" THK TYPE 304 SS.
2. PROVIDE 1/8" THK NEOPRENE GASKET BETWEEN ALL CONCRETE AND WEIR PLATE SURFACES THAT WOULD BE IN CONTACT WHEN THE WEIR ELEVATION IS MAXIMIZED.
3. ADHESIVE ANCHORS AND HARDWARE SHALL COMPLY WITH SECTION 05 50 00.
4. CAULK EDGES OF WEIR ON UPSTREAM AND DOWNSTREAM SIDES. CAULK SHALL BE ONE-PART POLYURETHANE. REFER TO AND COMPLY WITH SECTION 07 92 01, TYPE 5.

2 WEIR PLATE

1 1/2" = 1'-0"

D-011

GENERAL SHEET NOTES:

1 REFER TO SHEETS S-001 AND S-002 FOR STRUCTURAL GENERAL NOTES AND S-008 THRU S-016 FOR TYPICAL DETAILS.

2 EQUIPMENT LAYOUT, DIMENSIONS, ELEVATIONS AND LOCATIONS SHALL COMPLY WITH EQUIPMENT MANUFACTURER'S RECOMMENDATIONS AND APPROVED SHOP DRAWINGS.

STATE OF OHIO
JAMES R. GAGNON
E-66893
REGISTERED
PROFESSIONAL ENGINEER
3/17

NO.	DATE	REVISION	BY	APVD

DSGN J GAGNON | DR J BRADLEY | CHK T BECHTEL | APVD J GAGNON

©CH2M HILL 2014. ALL RIGHTS RESERVED.

REUSE OF DOCUMENTS: THIS DOCUMENT, AND THE IDEAS AND DESIGNS INCORPORATED HEREIN, AS AN INSTRUMENT OF PROFESSIONAL SERVICE, IS THE PROPERTY OF CH2M HILL AND IS NOT TO BE USED, IN WHOLE OR IN PART, FOR ANY OTHER PROJECT WITHOUT THE WRITTEN AUTHORIZATION OF CH2M HILL.

Clermont County

VILLAGE OF NEWTONSVILLE
WASTEWATER TREATMENT PLANT & COLLECTION SYSTEM - PART A
CLERMONT COUNTY WATER RESOURCES DEPARTMENT, CLERMONT COUNTY, OHIO

ch2m

PROCESS/MECHANICAL

POST AERATION
PLANS, SECTIONS AND DETAILS

As indicated

VERIFY SCALE

BAR IS ONE INCH ON ORIGINAL DRAWING
0 1"

DATE	2017-03-31
PROJ	665163
DWG	D-011
SHEET	48 of 91

BID READY

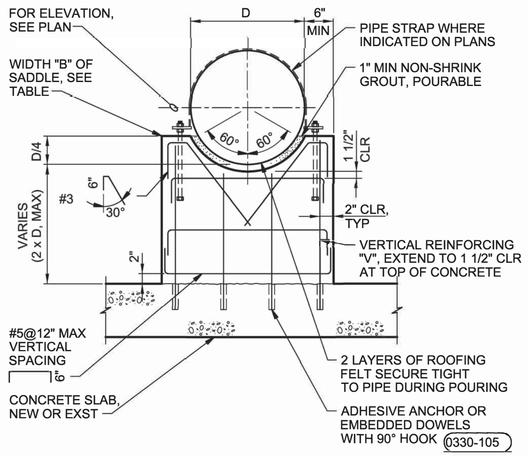

TYPE "A" SADDLE

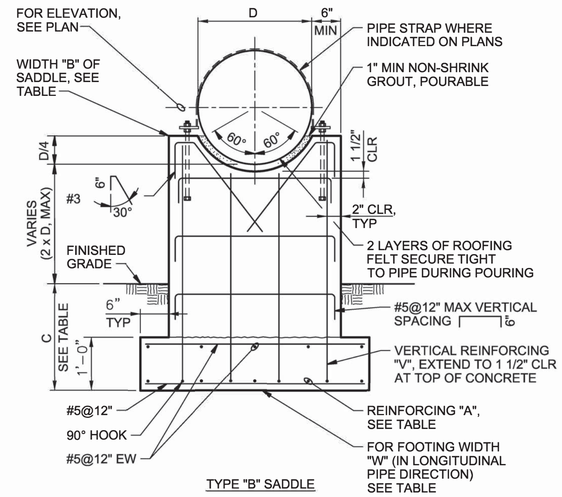

TYPE "B" SADDLE

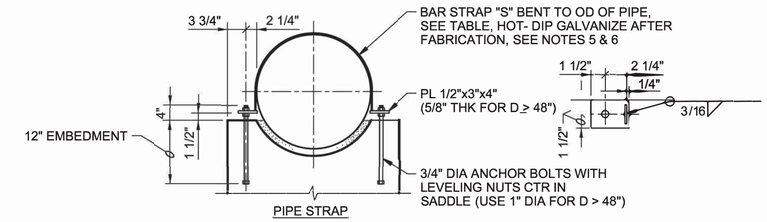

PIPE STRAP

PIPE SADDLE TABLE								
PIPE DIAMETER D	SADDLE WIDTH B	LAYERS OF REINFORCING	VERTICAL REINFORCING V	PIPE STRAP SIZE S	NO. OF STRAPS	FOOTING WIDTH W	REINFORCING A	FOOTING DEPTH C
D<12"	6"	1 (CTRD)	#5@12"	3/16"x2"	1	1'-6"	#5@12"	2'-0"
12"<D<24"	8"	1 (CTRD)	#5@12"	3/16"x2 1/2"	1	2'-0"	#5@12"	2'-0"
24"<D<36"	10"	2 (EF)	#5@12"	1/4"x2"	1	3'-0"	#5@12"	2'-0"
36"<D<48"	12"	2 (EF)	#5@12"	1/4"x3"	1	4'-0"	#5@12"	2'-0"
48"<D<60"	16"	2 (EF)	#6@12"	3/8"x3"	2	6'-0"	#5@6"	2'-0"
60"<D<72"	18"	2 (EF)	#6@12"	3/8"x3"	2	8'-0"	#5@6"	2'-0"

NOTES:

1. FOR "B"=10" OR THICKER, USE 2 LAYERS OF REINFORCING, TURN HORIZONTAL BARS 90° TO HOOK AROUND VERTICALS , 1 1/2" CLEAR OF CONCRETE
2. FORM 3/4" BEVEL ON ALL EXPOSED CORNERS OF SUPPORT.
3. USE TYPE 'A' SADDLE IN ALL LOCATIONS WHERE A SLAB (NEW OR EXISTING) OCCURS. USE TYPE 'B' IN OTHER LOCATIONS.
4. FOR LOCATIONS WHERE PIPE STRAP IS REQUIRED, SEE DRAWINGS. UNLESS INDICATED OTHERWISE A STRAP IS NOT REQUIRED.
5. AT SUBMERGED CONDITIONS, STRAP SHALL BE STAINLESS STEEL.
6. PROVIDE 3/4" BY STRAP WIDTH PLUS 1" WIDE NEOPRENE PAD BELOW STRAP.

PIPE SUPPORT - CONCRETE SADDLE

NTS

0330-061

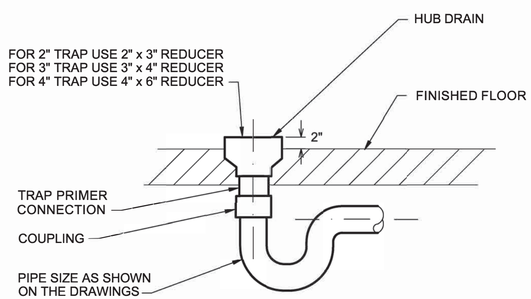

HUB DRAIN

NTS

2213-101

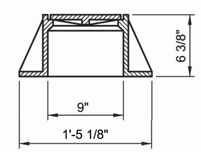

CLEANOUT FRAME AND COVER

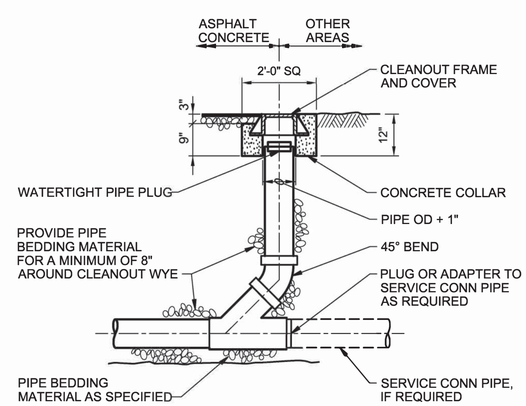

CLEANOUT

EXTERIOR CLEANOUT

NTS

3305-740

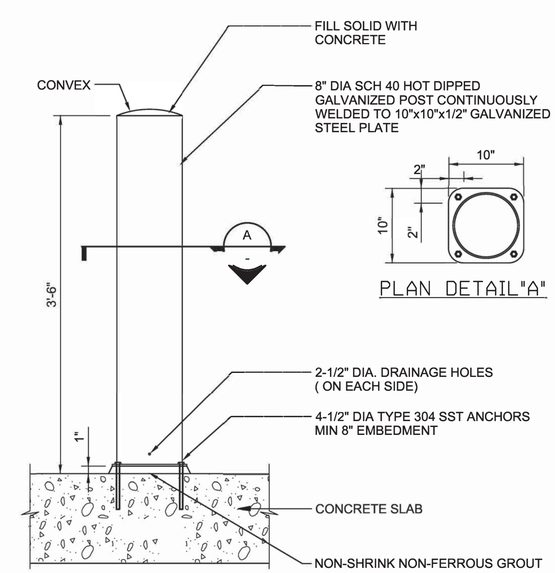

STEEL BOLLARD ON CONCRETE SLAB

NTS

3471-850

STATE OF OHIO JAMES R. GAGNON E-66893 REGISTERED PROFESSIONAL ENGINEER 3/17

NO.	DATE	REVISION	BY	APVD

DSGN J. GAGNON | DR J BRADLEY | CHK T BECHTEL | APVD J GAGNON

VILLAGE OF NEWTONSVILLE
WASTEWATER TREATMENT PLANT & COLLECTION SYSTEM - PART A
CLERMONT COUNTY WATER RESOURCES DEPARTMENT, CLERMONT COUNTY, OHIO

Clermont County

ch2m

PROCESS/MECHANICAL

TYPICAL DETAILS 1

NTS

VERIFY SCALE

BAR IS ONE INCH ON ORIGINAL DRAWING. 0 1"

DATE	2017-03-31
PROJ	652379
DWG	D-012
SHEET	49 of 91

BID READY

©CH2M HILL 2015. ALL RIGHTS RESERVED.

REUSE OF DOCUMENTS: THIS DOCUMENT, AND THE IDEAS AND DESIGNS INCORPORATED HEREIN, AS AN INSTRUMENT OF PROFESSIONAL SERVICE, IS THE PROPERTY OF CH2M HILL AND IS NOT TO BE USED, IN WHOLE OR IN PART, FOR ANY OTHER PROJECT WITHOUT THE WRITTEN AUTHORIZATION OF CH2M HILL.

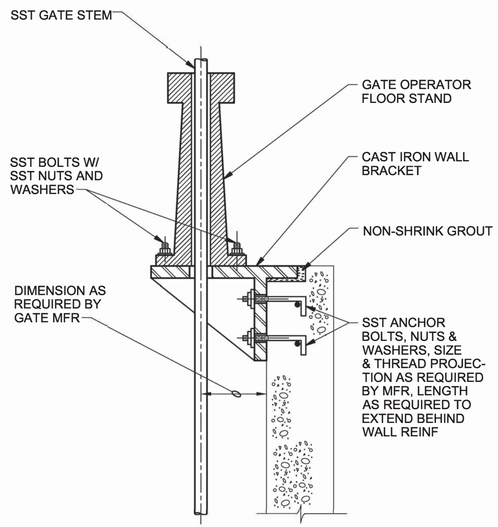

NOTES:

1. FLOOR STAND IS REPRESENTATIVE ONLY.

FLOOR STAND INSTALLATION

NTS

3520-700

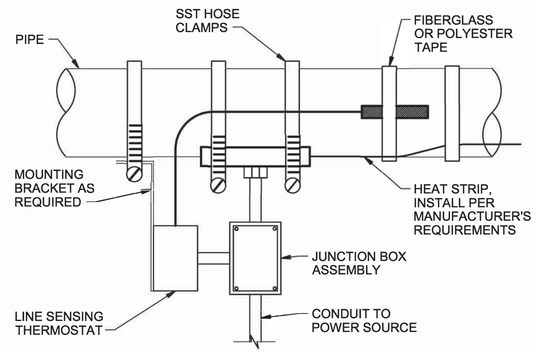

HEAT TRACE CONNECTION

NTS

4005-001

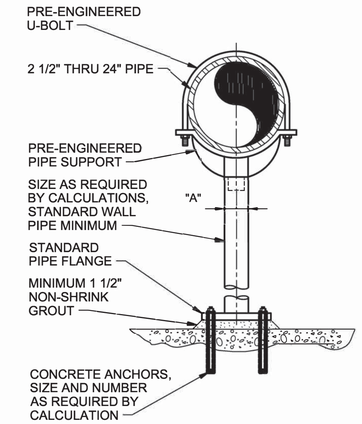

DIMENSION TABLE	
PIPE SIZE	"A" MINIMUM NOMINAL PIPE SIZE
2-1/2"	2-1/2"
3"	2-1/2"
4"	3"
6"	3"
8"	3"
10"	3"
12"	3"
14"	3"
16"	3"
20"	4"
24"	4"

NOTE:
SUBMIT FINAL DESIGN AND CALCULATIONS FOR SUPPORT AND ANCHORAGE AS SPECIFIED.

PIPE SUPPORT
SADDLE SUPPORT PEDESTAL TYPE - NON-ADJUSTABLE

NTS

4005-501

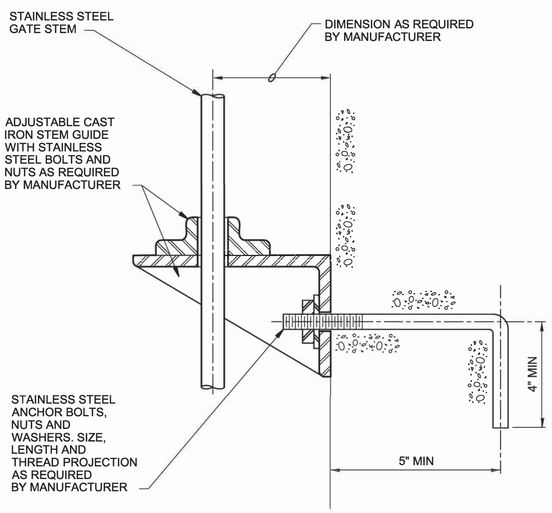

STEM GUIDE INSTALLATION

NTS

3520-702

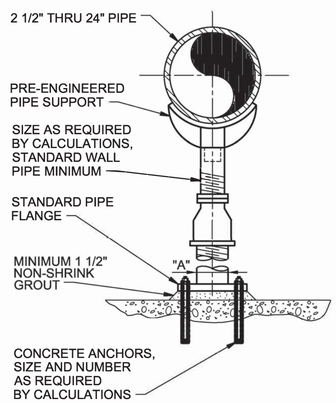

DIMENSION TABLE	
PIPE SIZE	"A" MINIMUM NOMINAL PIPE SIZE
2-1/2"	2-1/2"
3"	2-1/2"
4"	3"
6"	3"
8"	3"
10"	3"
12"	3"
14"	4"
16"	4"
20"	6"
24"	6"

NOTE:
SUBMIT FINAL DESIGN AND CALCULATIONS FOR SUPPORT AND ANCHORAGE AS SPECIFIED.

PIPE SUPPORT
SADDLE SUPPORT PEDESTAL TYPE - ADJUSTABLE

NTS

4005-500

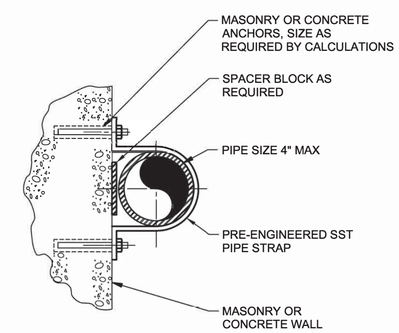

NOTES:

1. ONLY FOR VERTICAL PIPES.
2. NOT FOR USE ON CEILINGS OR BOTTOMS OF BEAMS.
3. PROVIDE PIPE PROTECTION BARRIER AS SPECIFIED. FABRICATE OVERSIZE STRAP WHERE REQUIRED.
4. SUBMIT FINAL DESIGN AND CALCULATIONS FOR SUPPORT AND ANCHORAGE AS SPECIFIED.

PIPE SUPPORT - WALL MOUNT

NTS

4005-503

STATE OF OHIO
JAMES R. GAGNON
E-66893
REGISTERED
PROFESSIONAL ENGINEER
3/17

NO.	DATE	REVISION	BY	APVD

DSGN J. GAGNON | DR J. BRADLEY | CHK T BECHTEL | APVD J GAGNON

VILLAGE OF NEWTONSVILLE
WASTEWATER TREATMENT PLANT & COLLECTION SYSTEM - PART A
CLERMONT COUNTY WATER RESOURCES DEPARTMENT, CLERMONT COUNTY, OHIO

PROCESS/MECHANICAL

TYPICAL DETAILS 2

NTS
VERIFY SCALE
BAR IS ONE INCH ON ORIGINAL DRAWING.
0 1"

DATE	2017-03-31
PROJ	652379
DWG	D-013
SHEET	50 of 91

BID READY

REUSE OF DOCUMENTS: THIS DOCUMENT, AND THE IDEAS AND DESIGNS INCORPORATED HEREIN, AS AN INSTRUMENT OF PROFESSIONAL SERVICE, IS THE PROPERTY OF CH2M HILL AND IS NOT TO BE USED, IN WHOLE OR IN PART, FOR ANY OTHER PROJECT WITHOUT THE WRITTEN AUTHORIZATION OF CH2M HILL.
©CH2M HILL 2015. ALL RIGHTS RESERVED.

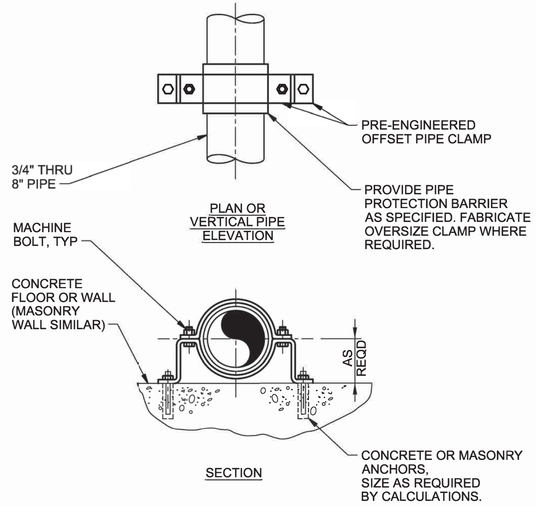

NOTES:

1. ONLY FOR VERTICAL OR FLOOR MOUNTED PIPES.
2. SUBMIT FINAL DESIGN AND CALCULATIONS FOR SUPPORT AND ANCHORAGE AS SPECIFIED.

PIPE SUPPORT - WALL MOUNT

NTS

4005-505

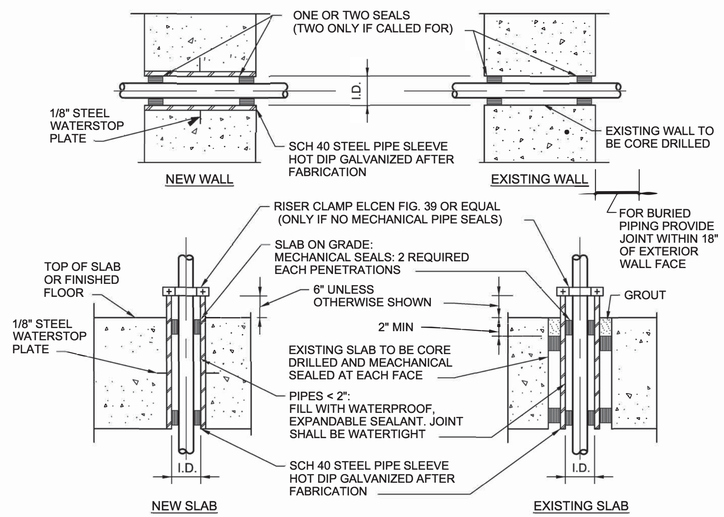

NOTES:

1. FOR FLANGE PIPE: FLANGE O.D. PLUS 2.0 INCHES.
2. FOR OTHER PIPES:
   A. WHERE MECHANICAL PIPE SEALS ARE CALLED FOR: AS RECOMMENDED BY SEAL MANUFACTURER
   B. FOR INSULATED PIPE: USE O.D. OF INSULATION TUBE AS PIPE O.D.

TYPE B PIPE SLEEVE

NTS

4027-604

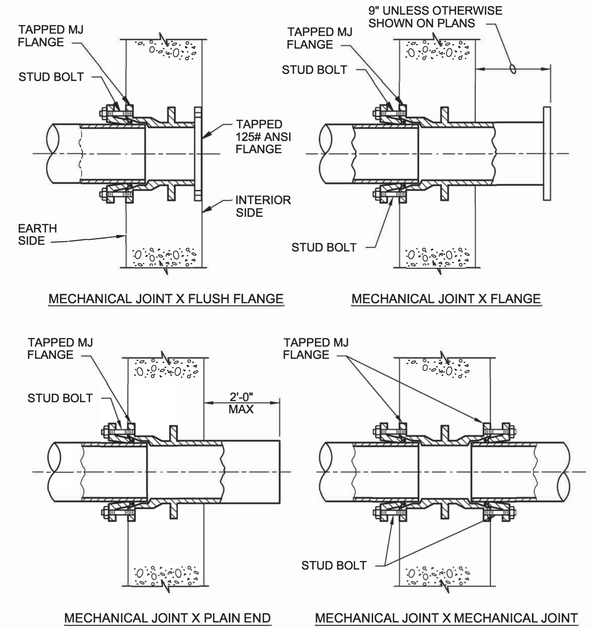

DUCTILE IRON WALL PIPES

NTS

4027-609

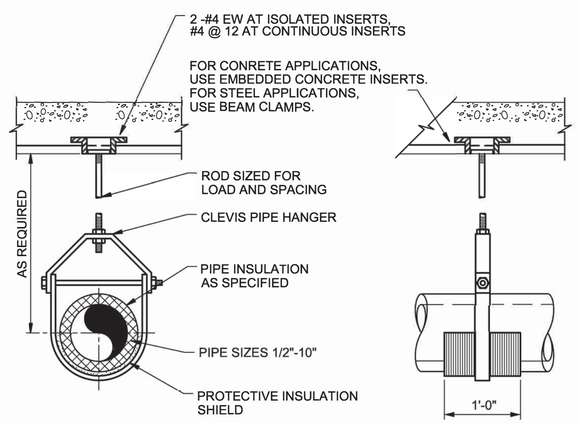

NOTES:

1. PIPE HANGERS SHALL BE OVERSIZED AS REQUIRED TO ACCOMMODATE THICKNESS OF INSULATION SPECIFIED. HANGER SHALL NOT COME INTO CONTACT WITH THE INSULATION DIRECTLY, EITHER AT THE VERTICAL YOKE OR AT THE POINT OF SUPPORT. FOR REQUIREMENTS ON INSULATION SHIELD USED WITH PIPE HANGERS, SEE SPECIFICATIONS.

PIPE HANGER

NTS

4005-557

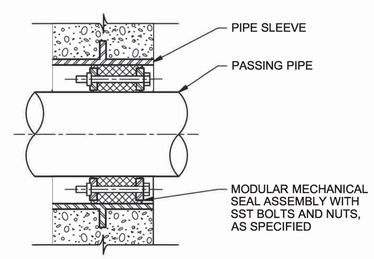

WALL PIPE PENETRATION SEAL

NTS

4027-607

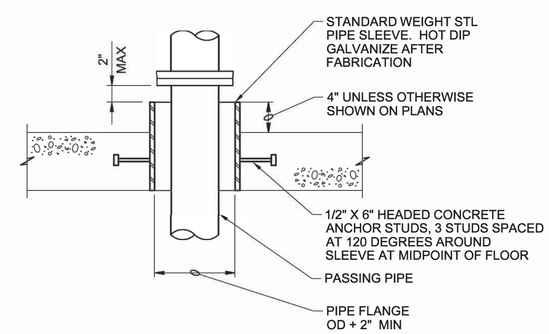

FLOOR SLEEVE

NTS

4027-621

NO.	DATE	DR	CHK	APVD	BY	APVD
DSGN	J. GAGNON	J BRADLEY	T BECHTEL		J GAGNON	

REVISION

STATE OF OHIO JAMES R. GAGNON E-66893 REGISTERED PROFESSIONAL ENGINEER 3/17

©CH2M HILL 2015. ALL RIGHTS RESERVED.

REUSE OF DOCUMENTS: THIS DOCUMENT, AND THE IDEAS AND DESIGNS INCORPORATED HEREIN, AS AN INSTRUMENT OF PROFESSIONAL SERVICE, IS THE PROPERTY OF CH2M HILL AND IS NOT TO BE USED, IN WHOLE OR IN PART, FOR ANY OTHER PROJECT WITHOUT THE WRITTEN AUTHORIZATION OF CH2M HILL.

Clermont County

VILLAGE OF NEWTONSVILLE
WASTEWATER TREATMENT PLANT & COLLECTION SYSTEM - PART A
CLERMONT COUNTY WATER RESOURCES DEPARTMENT, CLERMONT COUNTY, OHIO

ch2m

PROCESS/ MECHANICAL

TYPICAL DETAILS 3

NTS

VERIFY SCALE

BAR IS ONE INCH ON ORIGINAL DRAWING.
0 1"

DATE	2017-03-31
PROJ	652379
DWG	D-014
SHEET	51 of 91

BID READY

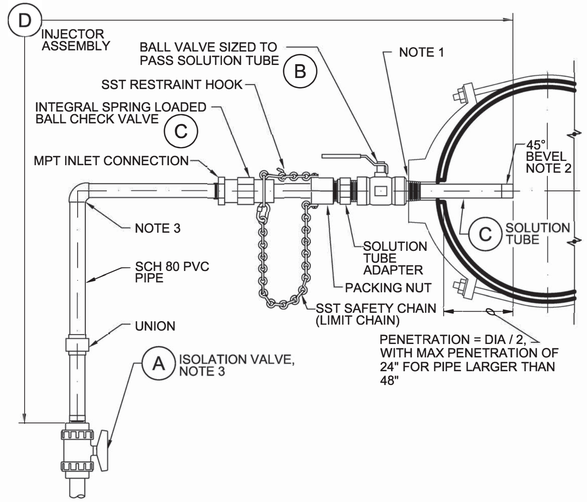

NOTES:

1. UNLESS OTHERWISE NOTED, PROVIDE SST SERVICE SADDLE FOR DUCTILE IRON (42" MAX). FOR CARBON STEEL AND SST PIPE (36" MAX), PROVIDE THREADOLET, SAME MATERIAL AS PIPE. FOR CARBON STEEL AND SST PIPE WITH INTERIOR COATING, WELD FITTINGS IN FACTORY PRIOR TO APPLYING INTERIOR COATING. FOR PVC, PROVIDE REDUCED TEE FITTING.
2. ORIENT BEVEL SO IT FACES FLOW DIRECTION. SEE VENDOR'S RECOMMENDATIONS.
3. FIELD LOCATE VALVE (A) TO ALLOW SOLUTION TUBE RETRACTION ONCE PIPE IS REMOVED. USE FITTINGS AS NEEDED.

CHEMICAL INJECTOR, RETRACTABLE, REMOVABLE RIGID PIPE

NTS

4027-957

SCHEDULE 1 - CHEMICAL INJECTOR DEFAULT COMPONENTS		
COMPONENT MARK	COMPONENT DESCRIPTION	MODEL / MATERIALS
(A)	ISOLATION VALVE	1/2" V330 (PVC)
(B)	SOLUTION TUBE ISOLATION VALVE	1" V307 (SST)
(C)	SOLUTION TUBE AND INTEGRAL SPRING LOADED BALL CHECK VALVE WITH TEFLON BALL	SEE SCHEDULE 2
(D)	INJECTOR ASSEMBLY INCLUDES (B)(C) AND ANCILLARIES	SAF-T-FLO EB146; OR EQUAL

SCHEDULE 2 - COMPONENTS BY CHEMICAL			
FLOW STREAM	DESCRIPTION (NOTE A)	MATERIAL OF SOLUTION TUBE AND BALL CHECK BODY & SPRING	OTHER COMPONENTS SEE SCHEDULE 1
AL	ALUM, 48%	HASTELLOY C-276	DEFAULT

GENERAL NOTES:

A. COMPONENTS SUITABLE FOR CONCENTRATIONS LISTED UP TO 100°F.
B. DETAIL SUITABLE FOR FEED PUMP MAX PRESSURE OF 150 PSIG. MAIN LINE PRESSURE 100 PSIG OR LESS, AND FEED LINE 1" OR LESS.
C. PROVIDE SUITABLE SUPPORT SYSTEM, AS PER SECTION 40 05 15, PIPING SUPPORT SYSTEMS.

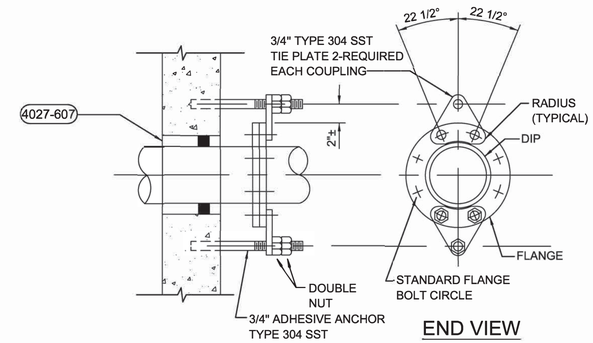

PIPE RESTRAINT AT WALL PENETRATION

NTS

4027-960

STATE OF OHIO
JAMES R. GAGNON
E-66893
REGISTERED
PROFESSIONAL ENGINEER
3/31/17

NO.	DATE	REVISION	BY	APVD

DSGN J. GAGNON | DR J BRADLEY | CHK T BECHTEL | APVD J GAGNON

©CH2M HILL 2015. ALL RIGHTS RESERVED.

REUSE OF DOCUMENTS: THIS DOCUMENT, AND THE IDEAS AND DESIGNS INCORPORATED HEREIN, AS AN INSTRUMENT OF PROFESSIONAL SERVICE, IS THE PROPERTY OF CH2M HILL AND IS NOT TO BE USED, IN WHOLE OR IN PART, FOR ANY OTHER PROJECT WITHOUT THE WRITTEN AUTHORIZATION OF CH2M HILL.

Clermont County

VILLAGE OF NEWTONSVILLE
WASTEWATER TREATMENT PLANT & COLLECTION SYSTEM - PART A
CLERMONT COUNTY WATER RESOURCES DEPARTMENT, CLERMONT COUNTY, OHIO

ch2m

PROCESS/MECHANICAL

TYPICAL DETAILS 4

NTS

VERIFY SCALE

BAR IS ONE INCH ON ORIGINAL DRAWING.
0 1"

DATE	2017-03-31
PROJ	652379
DWG	D-015
SHEET	52 of 91

BID READY

SYMBOL	DESCRIPTION

ONE-LINE DIAGRAM-1

	DRAWOUT AIR CIRCUIT BREAKER, LOW VOLTAGE
400	CIRCUIT BREAKER, THERMAL MAGNETIC TRIP SHOWN, 3 POLE, UNO
AS/AF or AT/AF	CIRCUIT BREAKER, STATIC TRIP UNIT, SENSOR AMP TRIP AND FRAME RATINGS SHOWN, 3 POLE, UNO
100/M	CIRCUIT BREAKER, MAGNETIC TRIP ONLY, TRIP RATING SHOWN, 3 POLE, UNO
400 400	CIRCUIT BREAKER WITH CURRENT LIMITING FUSES, TRIP AND FUSE RATING INDICATED, 3 POLE, UNO
400 225	FUSED SWITCH, SWITCH AND FUSE CURRENT RATING INDICATED, 3 POLE, UNO
100	SWITCH, CURRENT RATING INDICATED, 3 POLE, UNO
60 (3)	FUSE, CURRENT RATING AND QUANTITY INDICATED
1	MAGNETIC STARTER WITH OVERLOAD, NEMA SIZE INDICATED, FVNR UNO
TAVSDS	ELECTRONIC STARTER/SPEED CONTROL RVSS = REDUCED VOLTAGE SOFT STARTER AFD = AC ADJUSTABLE FREQUENCY DRIVE DC = DC ADJUSTABLE SPEED DRIVE RVAT = REDUCED VOLTAGE AUTO TRANSFORMER TYPE RVRT = REDUCED VOLTAGE REACTOR TYPE
	CABLE OR BUS CONNECTION POINT
K	KEY INTERLOCK
	SURGE ARRESTER (GAP TYPE)
10	CAPACITOR - KVAR INDICATED, 3 PHASE
3	AC MOTOR, SQUIRREL CAGE INDUCTION - HORSEPOWER INDICATED
G 500/625	GENERATOR, KW/KVA RATING SHOWN
VS V 0-600V	ANALOG METER WITH SWITCH - SCALE RANGE SHOWN V = VOLTAGE KW = KILOWATTS A = AMPERAGE KVAR = KILOVARS PF = POWER FACTOR
DPM	DIGITAL POWER METER (MULTIFUNCTION)
	UTILITY REVENUE METER
	GROUND
15 KVA 480-120/240V 1 PH	TRANSFORMER, SIZE, VOLTAGE RATINGS, AND PHASE INDICATED
	SHIELDED ISOLATION TRANSFORMER
480-120V (3)	POTENTIAL TRANSFORMER, VOLTAGE RATING AND QUANTITY INDICATED
100:5 (3)	CURRENT TRANSFORMER, RATIO(100:5) AND QUANTITY INDICATED (3)
	CONNECTION POINT TO EQUIPMENT SPECIFIED IN OTHER DIVISIONS. RACEWAY, CONDUCTOR AND CONNECTION IN THIS DIVISION
TVSS	TRANSIENT VOLTAGE SURGE SUPPRESSOR

ONE-LINE DIAGRAM-2

	DRAWOUT POWER CIRCUIT BREAKER, MEDIUM VOLTAGE
	NON DRAWOUT FUSED SWITCH, MEDIUM VOLTAGE
	DRAWOUT FUSED SWITCH AND CONTACTOR, MEDIUM VOLTAGE
	DRAWOUT FUSED SWITCH AND VACUUM CONTACTOR, MEDIUM VOLTAGE
	DRAWOUT VACUUM CONTACTOR, MEDIUM VOLTAGE
	MEDIUM VOLTAGE CABLE STRESS CONE TYPE TERMINATION, OPEN TERMINATOR OR ELBOW
	SWITCH - LOAD BREAK, GROUP OPERATED, MEDIUM VOLTAGE
	SWITCH W/ARCING HORNS, MEDIUM VOLTAGE
	DISCONNECTING FUSE - SOLID MATERIAL, MEDIUM VOLTAGE
	SWITCH - HOOK STICK OPERATED, SINGLE POLE, MEDIUM VOLTAGE
	FUSE - EXPULSION, HOOK STICK OPERATED, SINGLE POLE, MEDIUM VOLTAGE
	GROUND SWITCH, GANG OPERATED
	TERMINAL BLOCK LUG
	DELTA CONNECTION
	WYE GROUNDED CONNECTION, SOLID GROUND
R or Z	WYE NEUTRAL GROUND RESISTOR OR IMPEDANCE CONNECTION
86	RELAY OR DEVICE, FUNCTION NUMBER AS INDICATED
50:5 (1)	CURRENT TRANSFORMER, ZERO SEQUENCE, RATIO AND QUANTITY INDICATED
800/1200:5 (3)	BUSHING CURRENT TRANSFORMER, MULTI-RATIO AND QUANTITY INDICATED
MO	MOTOR OPERATOR, BREAKER OR SWITCH
EUM	ENERGY MONITORING UNIT
MRP	MOTOR PROTECTION RELAY

NOTES:

1. THESE ARE STANDARD LEGEND SHEETS. SOME SYMBOLS AND ABBREVIATIONS MAY APPEAR ON THE LEGEND AND NOT ON THE DRAWINGS.
2. FOR ADDITIONAL ABBREVIATIONS OF OTHER DIVISIONS (HVAC, MECHANICAL, AND STRUCTURAL/ARCHITECTURAL) SEE OTHER LEGENDS.

CONTROL DIAGRAM-1

	PUSH-BUTTON SWITCH, MOMENTARY CONTACT, NORMALLY OPEN
	PUSH-BUTTON SWITCH, MOMENTARY CONTACT, NORMALLY CLOSED
	PUSH BUTTON SWITCH, MAINTAINED CONTACTS WITH MECHANICAL INTERLOCK
	3 POSITION SELECTOR SWITCH MAINTAINED CONTACT
HAND OFF REMOTE	SELECTOR SWITCH - MAINTAINED CONTACT - CHART IDENTIFIES OPERATION WHEN NEEDED FOR CLARITY:

	POSITION		
CKT	HAND	OFF	REMOTE
1	X	O	O
2	O	O	X

X - CLOSED CONTACT
O - OPEN CONTACT

	TOGGLE SWITCH, ON-OFF TYPE
ON OFF	SELECTOR SWITCH, ON-OFF TYPE
	MUSHROOM HEAD PUSHBUTTON SWITCH
A	INDICATING LIGHT, PUSH-TO-TEST, LETTER INDICATES COLOR
A	INDICATING LIGHT - LETTER INDICATES COLOR A - AMBER G - GREEN S - STROBE B - BLUE R - RED C - CLEAR W - WHITE
ETM	ELAPSED TIME METER
M	MOTOR STARTER CONTACTOR COIL
CRX	CONTROL RELAY, X INDICATES NUMERICAL ORDER IN CIRCUIT
TDR X	TIME DELAY RELAY, X INDICATES NUMERICAL ORDER IN CIRCUIT
SV X	SOLENOID VALVE, X INDICATES NUMERICAL ORDER IN CIRCUIT
	CONTACT - NORMALLY OPEN
	CONTACT - NORMALLY CLOSED
	REMOTE DEVICE
	TIME DELAY RELAY CONTACT, NORMALLY OPEN, CLOSES WHEN ENERGIZED AND TIMED OUT
	TIME DELAY RELAY CONTACT, NORMALLY CLOSED, OPENS WHEN ENERGIZED AND TIMED OUT
	TIME DELAY RELAY CONTACT, CLOSES WHEN ENERGIZED, OPENS WHEN DE-ENERGIZED AND TIMED OUT
	TIME DELAY RELAY CONTACT, OPENS WHEN ENERGIZED, CLOSES WHEN DE-ENERGIZED AND TIMED OUT
	MOTOR SPACE HEATER
	TERMINAL BLOCK, REMOTE
	TERMINAL BLOCK, INTERNAL
	FUSED TERMINAL BLOCK
	FUSE, RATING INDICATED
CPT 120V	TRANSFORMER, CONTROL POWER
	THERMOCOUPLE

CONTROL DIAGRAM-2

	CAPACITOR
+ −	BATTERY
	LIMIT SWITCH, NORMALLY OPEN, CLOSES AT END OF TRAVEL
	LIMIT SWITCH, NORMALLY CLOSED, OPENS AT END OF TRAVEL
	TEMPERATURE SWITCH, OPENS ON TEMPERATURE RISE
	TEMPERATURE SWITCH, CLOSES ON TEMPERATURE RISE
	FLOAT SWITCH, NORMALLY OPEN, CLOSES ON DESCENDING LEVEL
	FLOAT SWITCH, NORMALLY OPEN, CLOSES ON RISING LEVEL
	PRESSURE SWITCH, NORMALLY CLOSED, OPENS ON RISING PRESSURE
	PRESSURE SWITCH, NORMALLY OPEN, CLOSES ON RISING PRESSURE
	FLOW SWITCH, CLOSES ON INCREASED FLOW
	FLOW SWITCH, OPENS ON INCREASED FLOW
NGR	NEUTRAL GROUND CURRENT LIMITING RESISTOR
RES	CALIBRATING RESISTOR
T GEN	TACHOMETER GENERATOR
GFS	GROUND FAULT SENSOR
	FLASHER
	SEALED CONTACT
	BUZZER
	POTENTIOMETER
	RESISTOR
	BLOWN FUSE INDICATOR
	COAXIAL CABLE
	MULTICONDUCTOR SHIELDED CABLE
	DUPLEX RECEPTACLE
L U	RELAY, WITH MECHANICAL LATCH
	FULLWAVE DIODE BRIDGE (AC TO DC)

STATE OF OHIO
CHRISTOPHER B. ROBERTSON
69219
REGISTERED
PROFESSIONAL ENGINEER
12-15-17

NO.	DATE	REVISION	DR	CHK	APVD	BY	APVD
DSGN	C ROBERTSON		C ROBERTSON	J MOORMAN		C ROBERTSON	

REUSE OF DOCUMENTS: THIS DOCUMENT, AND THE IDEAS AND DESIGNS INCORPORATED HEREIN, AS AN INSTRUMENT OF PROFESSIONAL SERVICE IS THE PROPERTY OF CH2M HILL AND IS NOT TO BE USED, IN WHOLE OR IN PART, FOR ANY OTHER PROJECT WITHOUT THE WRITTEN AUTHORIZATION OF CH2M HILL.
©CH2M HILL 2015. ALL RIGHTS RESERVED.

Clermont County

VILLAGE OF NEWTONSVILLE
WASTEWATER TREATMENT PLANT & COLLECTION SYSTEM - PART A
CLERMONT COUNTY WATER RESOURCES DEPARTMENT, CLERMONT COUNTY, OHIO

ELECTRICAL

ELECTRICAL SYMBOLS & LEGEND 1

VERIFY SCALE
BAR IS ONE INCH ON ORIGINAL DRAWING.
0 1"

DATE	2017-03-31
PROJ	652379
DWG	E-001
SHEET	53 of 91

SYMBOL	DESCRIPTION

POWER SYSTEM PLAN-1

SYMBOL	DESCRIPTION
	CONNECTION POINT TO EQUIPMENT SPECIFIED. RACEWAY, CONDUCTOR,TERMINATION AND CONNECTION IN THIS DIVISION.
MCC-A	MAJOR ELECTRICAL COMPONENT OR DEVICE - NAME OR IDENTIFYING SYMBOL AS SHOWN.
LPXXA	PANELBOARD - SURFACE MOUNTED PANELBOARD LETTER OR NUMBER FACILITY NUMBER LP - LOW VOLTAGE PANEL DP - DISTRIBUTION PANEL
	PANELBOARD - FLUSH MOUNTED
	TERMINAL JUNCTION BOX
M	MOTOR, SQUIRREL CAGE INDUCTION
G	GENERATOR, VOLTAGE AND SIZE AS INDICATED.
LPXXA	HOME RUN - DESTINATION SHOWN
or G	EXPOSED CONDUIT AND CONDUCTORS*
or G	CONCEALED CONDUIT AND CONDUCTORS*

NOTE:
ALL UNMARKED CONDUIT RUNS CONSIST OF TWO NO. 12, ONE NO. 12 GROUND CONDUCTORS IN 3/4" CONDUIT. RUNS MARKED WITH CROSSHATCHES INDICATE NUMBER OF NO. 12 CONDUCTORS. CROSSHATCH WITH SUBSCRIPT "G" INDICATES GREEN GROUND WIRE.

SYMBOL	DESCRIPTION
G	CROSSHATCHES WITH BAR INDICATE NO.10 CONDUCTOR. SIZE CONDUIT ACCORDING TO SPECIFICATIONS AND APPLICABLE CODE.
[A1]	CONDUIT AND CONDUCTOR CALLOUT, SEE LEGEND.
	CONDUIT DOWN
	CONDUIT UP
	CONDUIT, STUBBED AND CAPPED
	CONDUIT TERMINATION AT CABLE TRAY
EX	EXISTING CONDUIT/ DUCT BANK
BD	BUS DUCT - SEE SPECIFICATIONS
CE	CONCRETE ENCASED CONDUIT
DB	DIRECT BURIED CONDUIT
FO	FIBER OPTIC CONDUIT
XXXX	CONCRETE ENCASED DUCT BANK WHERE XXXX IS THE DUCT BANK NAME. SEE CIRCUIT AND RACEWAY CODING DEFINITION
	CONCEALED CONDUIT ROUTING AREA
	CONDUIT ROUTING AREA
	CABLE TRAY
T	TRANSFORMER
J or CS	GENERAL CONTROL OR WIRING DEVICE. LETTER SYMBOLS OR ABBREVIATIONS INDICATE TYPE OF DEVICE
CS	CONTROL STATION, SEE CONTROL DIAGRAMS FOR CONTROL DEVICE(S) REQUIRED.
30	NONFUSED DISCONNECT SWITCH, CURRENT RATING INDICATED, 3 POLE
60/40	FUSED DISCONNECT SWITCH, CURRENT RATING INDICATED (60/40, 60=SWITCH RATING / 40=FUSE RATING) 3 POLE
2	COMBINATION CIRCUIT BREAKER AND MAGNETIC STARTER, NEMA SIZE INDICATED

POWER SYSTEM PLAN-2

SYMBOL	DESCRIPTION
100/40	BREAKER, SEPARATELY MOUNTED, CURRENT RATING INDICATED (100/40, 100 = FRAME SIZE; 40 = TRIP RATING) 3 POLE
2	STARTER, MAGNETIC NEMA SIZE INDICATED
XX 2	CONVENIENCE RECEPTACLE - DUPLEX UNLESS NOTED OTHERWISE WP- WEATHERPROOF C- CLOCK HANGER TL- TWIST LOCK CRE- CORROSION RESISTANT GFCI- GROUND FAULT CIRCUIT INTERRUPTER SUBSCRIPT NUMBER AT RECEPTACLE INDICATES CIRCUIT
	240V RECEPTACLE
F	FIRE ALARM HORN
T	THERMOSTAT
	TELEPHONE RECEPTACLE
	DATA OUTLET
EUH	ELECTRIC UNIT HEATER
	UTILITY POLE

LIGHTING SYSTEM PLAN

SYMBOL	DESCRIPTION
1 or 1	LUMINAIRE, SEE SCHEDULE
1	LUMINAIRE, SEE SCHEDULE
1 or	LUMINAIRE WITH INTERNAL BATTERY BACKUP, SEE SCHEDULE
4 or 4	LUMINAIRE AND POLE, SEE SCHEDULE
5 or 5	WALL MOUNTED LUMINAIRE, SEE SCHEDULE
	STANDBY LIGHTING UNIT, SURFACE MOUNTED, SEE SCHEDULE
XX or	EXIT LIGHTS - FILLED SECTION INDICATES LIGHTED FACE, ARROW INDICATES EGRESS DIRECTIONAL INDICATORS, XX = FIXTURE NUMBER, SEE SCHEDULE
$3a or 2a	SMALL LETTER SUBSCRIPT AT SWITCH AND LUMINAIRE INDICATES SWITCHING. SUBSCRIPT NUMBER AT LUMINAIRE INDICATES CIRCUIT
$3	WALL SWITCH: 2- DOUBLE POLE P- PILOT LIGHT 3- THREE WAY K- KEY OPERATED 4- FOUR WAY D- DIMMER WP- WEATHERPROOF CRE- CORROSION RESISTANT EX- EXPLOSIONPROOF L- MOMENTARY 3-WAY M- MOTOR RATED MS- MANUAL STARTER WITH OVERLOADS OS- OCCUPANCY SENSOR
OS	OCCUPANCY SENSOR
LC	LIGHTING CONTACTOR
MD	MOTION DETECTOR
PC	PHOTOCELL

GROUND SYSTEM PLAN

SYMBOL	DESCRIPTION
	GROUND ROD
	GROUND ROD IN TEST WELL
G	GROUNDING CONDUCTOR, SIZE AS INDICATED
	PIGTAIL FOR CONNECTION TO EQUIPMENT CABINET OR FRAME
G	EQUIPMENT GROUND BUS
N	EQUIPMENT NEUTRAL BUS

ABBREVIATIONS

A	AMPERE, AUTOMATIC
AC	ALTERNATING CURRENT
AFD	ADJUSTABLE FREQUENCY DRIVE
AFF	ABOVE FINISHED FLOOR
ATS	AUTOMATIC TRANSFER SWITCH
BKR	BREAKER
C	CONDUIT, CONTACTOR, CONDUCTOR, CLOSE
CPT	CONTROL POWER TRANSFORMER
CR	CONTROL RELAY
CT	CURRENT TRANSFORMER, CABLE TRAY
DC	DIRECT CURRENT
DP	DISTRIBUTION PANEL
E	EMPTY
F, FU	FUSE
FREQ	FREQUENCY
G	GROUND
GEN	GENERATOR
GFCI	GROUND FAULT CIRCUIT INTERRUPTER
GND	GROUND
HH	HANDHOLE
HOA	HAND-OFF-AUTO
HP	HORSEPOWER
HS	HAND SWITCH
HZ	HERTZ
IC	INTERRUPTING CAPACITY
J, JB	JUNCTION BOX
KA	KILOAMPERES
KV	KILOVOLT
KVA	KILOVOLT AMPERES
KW	KILOWATTS
M	MAGNETIC CONTACTOR COIL, MOTOR, MANUAL
MCC	MOTOR CONTROL CENTER
MH	MANHOLE, METAL HALIDE, MOUNTING HEIGHT
NC	NORMALLY CLOSED
N.O.	NORMALLY OPEN
NTS	NOT TO SCALE
OL	OVERLOAD RELAY
PB	PULL BOX
RGS	RIGID GALVANIZED STEEL CONDUIT
SS	START STOP
SST	STAINLESS STEEL
SV	SOLENOID VALVE
SWBD	SWITCHBOARD
TYP	TYPICAL
	VOLTAGE, VOLTS
W	WATTS
WP	WEATHERPROOF
XFMR	TRANSFORMER

GENERAL NOTES

A. ELECTRICAL PLAN DRAWINGS ARE GENERALLY DIAGRAMMATIC AND EQUIPMENT LOCATION SHOULD BE CONSIDERED APPROXIMATE UNLESS DIMENSIONED. THE INSTALLING CONTRACTOR IS RESPONSIBLE FOR DETERMINING EXACT FINAL DEVICE AND EQUIPMENT LOCATIONS AND COORDINATING WITH ALL TRADES TO AVOID CONFLICTS.

B. CONDUIT ROUTING SHOWN IS GENERALLY DIAGRAMMATIC. CONDUIT SHALL BE INSTALLED TO MATCH ROUTING SHOWN AS CLOSELY AS PRACTICAL AND BE COORDINATED IN THE FIELD WITH ALL TRADES AND SITE CONDITIONS. CONTRACTOR SHALL DETERMINE ROUTING FOR RACEWAYS NOT ILLUSTRATED ON THE PLANS IN ACCORDANCE WITH THE SPECIFICATIONS, CODE REQUIREMENTS, AND TO PROVIDE A NEAT, WORKMAN LIKE, FULLY OPERATIONAL SYSTEM.

C. THE LATEST VERSION OF SPECIFICATION SECTION "3301 - SANITARY SEWER PUMP STATION, ELECTRICAL" PROVIDED BY THE COUNTY SHALL TAKE PRECEDENCE OVER SECTION 26 05 01.

STATE OF OHIO CHRISTOPHER C. ROBERTSON 69219 PROFESSIONAL ENGINEER REGISTERED

NO.	DATE	REVISION	BY	APVD

DR: C ROBERTSON | CHK: J MOORMAN | APVD: C ROBERTSON
DSGN: C ROBERTSON

©CH2M HILL 2015. ALL RIGHTS RESERVED.

REUSE OF DOCUMENTS: THIS DOCUMENT, AND THE IDEAS AND DESIGNS INCORPORATED HEREIN, AS AN INSTRUMENT OF PROFESSIONAL SERVICE IS THE PROPERTY OF CH2M HILL AND IS NOT TO BE USED, IN WHOLE OR IN PART, FOR ANY OTHER PROJECT WITHOUT THE WRITTEN AUTHORIZATION OF CH2M HILL.

Clermont County

VILLAGE OF NEWTONSVILLE
WASTEWATER TREATMENT PLANT & COLLECTION SYSTEM - PART A
CLERMONT COUNTY WATER RESOURCES DEPARTMENT, CLERMONT COUNTY, OHIO

ELECTRICAL

ELECTRICAL SYMBOLS & LEGEND 2

NTS
VERIFY SCALE
BAR IS ONE INCH ON ORIGINAL DRAWING.
0 1"

DATE	2017-03-31
PROJ	652379
DWG	E-002
SHEET	54 of 91

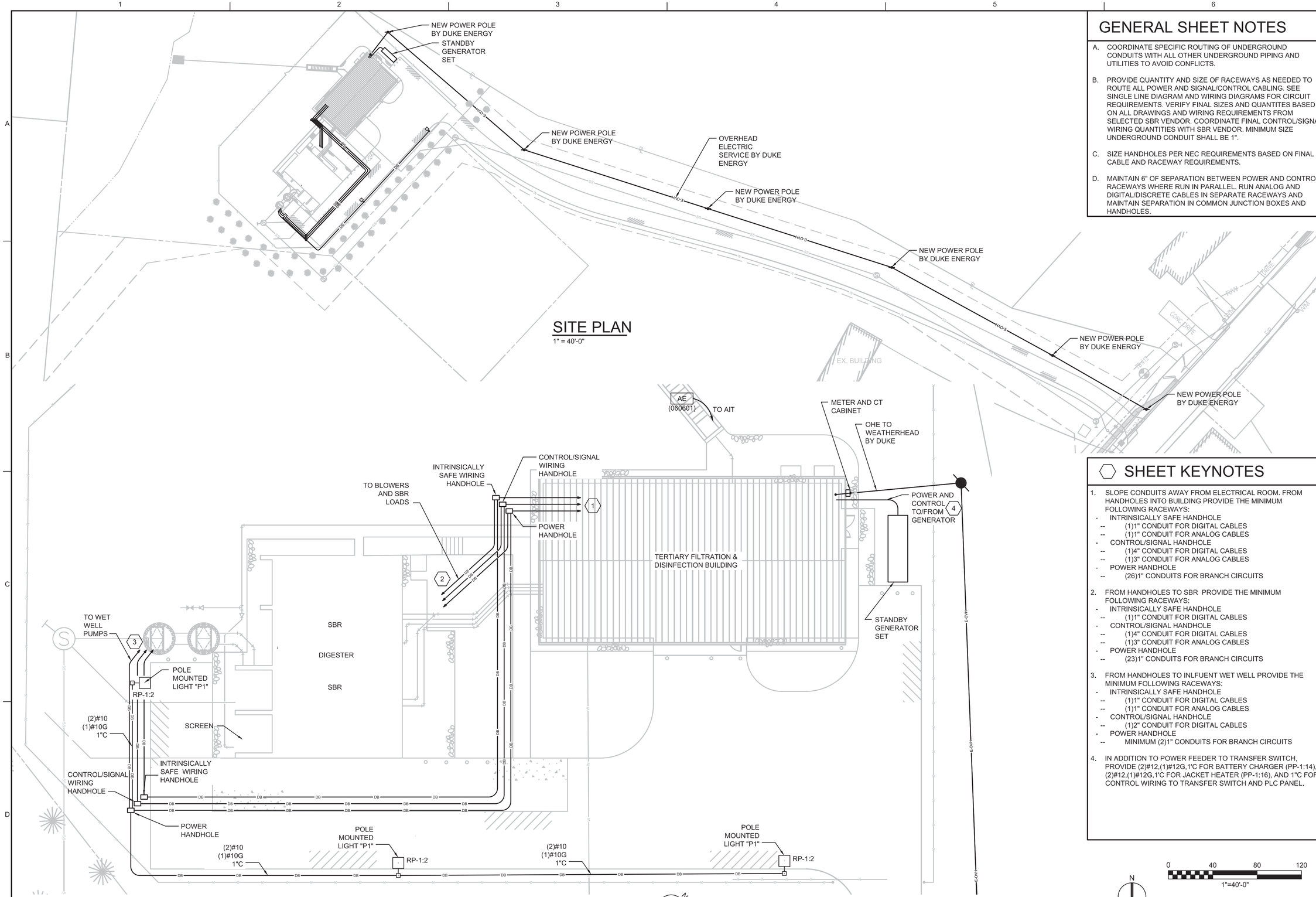

SITE PLAN

1" = 40'-0"

DETAILED SITE PLAN

1" = 10'-0"

GENERAL SHEET NOTES

A. COORDINATE SPECIFIC ROUTING OF UNDERGROUND CONDUITS WITH ALL OTHER UNDERGROUND PIPING AND UTILITIES TO AVOID CONFLICTS.

B. PROVIDE QUANTITY AND SIZE OF RACEWAYS AS NEEDED TO ROUTE ALL POWER AND SIGNAL/CONTROL CABLING. SEE SINGLE LINE DIAGRAM AND WIRING DIAGRAMS FOR CIRCUIT REQUIREMENTS. VERIFY FINAL SIZES AND QUANTITES BASED ON ALL DRAWINGS AND WIRING REQUIREMENTS FROM SELECTED SBR VENDOR. COORDINATE FINAL CONTROL/SIGNAL WIRING QUANTITIES WITH SBR VENDOR. MINIMUM SIZE UNDERGROUND CONDUIT SHALL BE 1".

C. SIZE HANDHOLES PER NEC REQUIREMENTS BASED ON FINAL CABLE AND RACEWAY REQUIREMENTS.

D. MAINTAIN 6" OF SEPARATION BETWEEN POWER AND CONTROL RACEWAYS WHERE RUN IN PARALLEL. RUN ANALOG AND DIGITAL/DISCRETE CABLES IN SEPARATE RACEWAYS AND MAINTAIN SEPARATION IN COMMON JUNCTION BOXES AND HANDHOLES.

SHEET KEYNOTES

1. SLOPE CONDUITS AWAY FROM ELECTRICAL ROOM. FROM HANDHOLES INTO BUILDING PROVIDE THE MINIMUM FOLLOWING RACEWAYS:
   - INTRINSICALLY SAFE HANDHOLE
     - (1)1" CONDUIT FOR DIGITAL CABLES
     - (1)1" CONDUIT FOR ANALOG CABLES
   - CONTROL/SIGNAL HANDHOLE
     - (1)4" CONDUIT FOR DIGITAL CABLES
     - (1)3" CONDUIT FOR ANALOG CABLES
   - POWER HANDHOLE
     - (26)1" CONDUITS FOR BRANCH CIRCUITS
2. FROM HANDHOLES TO SBR PROVIDE THE MINIMUM FOLLOWING RACEWAYS:
   - INTRINSICALLY SAFE HANDHOLE
     - (1)1" CONDUIT FOR DIGITAL CABLES
   - CONTROL/SIGNAL HANDHOLE
     - (1)4" CONDUIT FOR DIGITAL CABLES
     - (1)3" CONDUIT FOR ANALOG CABLES
   - POWER HANDHOLE
     - (23)1" CONDUITS FOR BRANCH CIRCUITS
3. FROM HANDHOLES TO INLFUENT WET WELL PROVIDE THE MINIMUM FOLLOWING RACEWAYS:
   - INTRINSICALLY SAFE HANDHOLE
     - (1)1" CONDUIT FOR DIGITAL CABLES
     - (1)1" CONDUIT FOR ANALOG CABLES
   - CONTROL/SIGNAL HANDHOLE
     - (1)2" CONDUIT FOR DIGITAL CABLES
   - POWER HANDHOLE
     - MINIMUM (2)1" CONDUITS FOR BRANCH CIRCUITS
4. IN ADDITION TO POWER FEEDER TO TRANSFER SWITCH, PROVIDE (2)#12,(1)#12G,1'C FOR BATTERY CHARGER (PP-1:14), (2)#12,(1)#12G,1'C FOR JACKET HEATER (PP-1:16), AND 1"C FOR CONTROL WIRING TO TRANSFER SWITCH AND PLC PANEL.

0 40 80 120
1"=40'-0"

0 10 20 30
1"=10'-0"

NO.	DATE	REVISION	BY	APVD

DSGN C ROBERTSON | DR C ROBERTSON | CHK J MOORMAN | APVD C ROBERTSON

VILLAGE OF NEWTONSVILLE
WASTEWATER TREATMENT PLANT & COLLECTION SYSTEM - PART A
CLERMONT COUNTY WATER RESOURCES DEPARTMENT, CLERMONT COUNTY, OHIO

ELECTRICAL

ELECTRICAL SITE PLAN

VERIFY SCALE
BAR IS ONE INCH ON ORIGINAL DRAWING.
0 1"

DATE	2017-03-31
PROJ	665163
DWG	E-003
SHEET	55 of 91

REUSE OF DOCUMENTS: THIS DOCUMENT, AND THE IDEAS AND DESIGNS INCORPORATED HEREIN, AS AN INSTRUMENT OF PROFESSIONAL SERVICE IS THE PROPERTY OF CH2M HILL AND IS NOT TO BE USED, IN WHOLE OR IN PART, FOR ANY OTHER PROJECT WITHOUT THE WRITTEN AUTHORIZATION OF CH2M HILL.
©CH2M HILL 2015. ALL RIGHTS RESERVED.

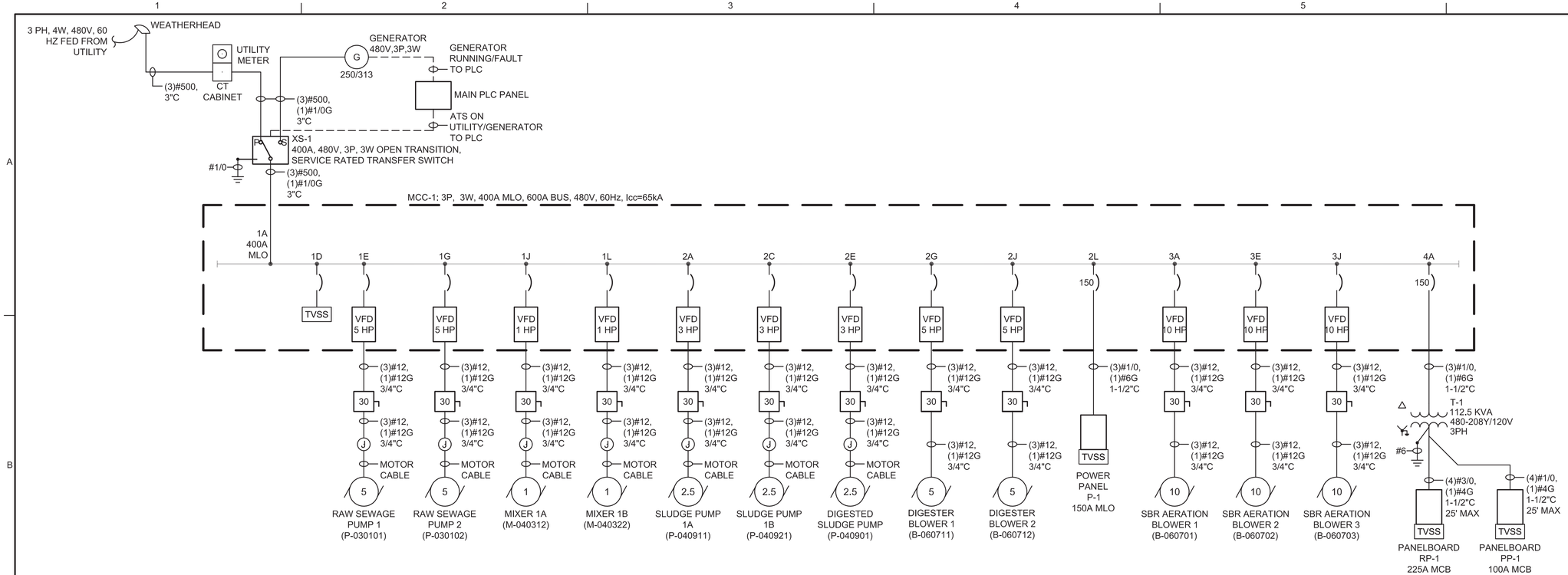

MCC-1 SINGE LINE DIAGRAM

NTS

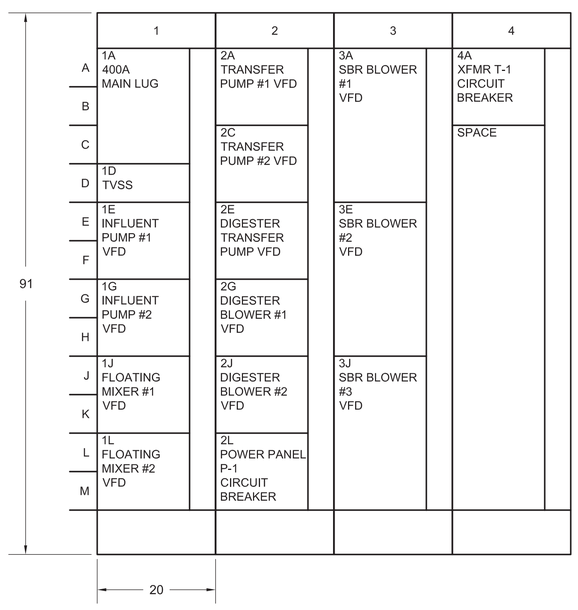

MCC-1 ELEVATION

NTS

PANELBOARD P-1

MOUNTING: SURFACE	VOLTAGE: 480V	PHASE: 3	WIRE: 3
COVER: NEMA 1	MAINS: MAIN LUG ONLY	BUS: 150A	MAINS LOCATION: BOTTOM ENTRY
	TRIP: 150A		NEUTRAL: 200%

UL LISTED BREAKER INTERRUPTING CAPACITY: 14K A RMS. SYM. MIN.

LOAD (KVA)	DESCRIPTION	CKT.		L1	L2	L3		CKT.	DESCRIPTION	LOAD (KVA)	PHASE LOAD KVA L1	L2	L3
1.39	MECHANICALLY CLEANED SCREEN (SCN-030201)	1	20/3				20/3	2	SLUICE GATE 1A (SG-040311)	0.56	1.95		
1.39		3						4		0.56		1.95	
1.39		5						6		0.56			1.95
0.40	DECANTER DISCHARGE VALVE 1A (V-040317)	7	20/3				20/3	8	SLUICE GATE 1B (SG-040321)	0.56	0.96		
0.40		9						10		0.56		0.96	
0.40		11						12		0.56			0.96
0.40	DECANTER DISCHARGE VALVE 1B (V-040327)	13	20/3				20/3	14	SPARE		0.40		
0.40		15						16				0.40	
0.40		17						18					0.40
6.90	TERTIARY FILTRATION CONTROL PANEL 1	19	40/3				20/3	20	SPARE		6.90		
6.90		21						22				6.90	
6.90		23						24					6.90
6.90	TERTIARY FILTRATION CONTROL PANEL 1	25	40/3				20/3	26	SPARE		6.90		
6.90		27						28				6.90	
6.90		29						30					6.90
	SPARE	31	20/1				25/3	32	NPW BREAK TANK SKID	2.67	2.67		
	SPARE	33	20/1					34		2.67		2.67	
	SPARE	35	20/1					36		2.67			2.67
	SPARE	37	20/1				20/1	38	SPARE		0.00		
	SPARE	39	20/1				20/1	40	SPARE			0.00	
	SPARE	41	20/1				20/1	42	SPARE				0.00
									TOTAL				
									CONNECTED LOAD (kVA)	59.3	19.8	19.8	19.8
									CONNECTED LOAD (AMPS)	71.3			
									DEMAND LOAD (kVA)	59.3			
									DEMAND LOAD (AMPS)	71.3			

PANELBOARD P-1 SCHEDULE

NTS

NO.	DATE	REVISION	BY	APVD

DSGN C ROBERTSON | DR C ROBERTSON | CHK J MOORMAN | APVD C ROBERTSON

VILLAGE OF NEWTONSVILLE
WASTEWATER TREATMENT PLANT & COLLECTION SYSTEM - PART A
CLERMONT COUNTY WATER RESOURCES DEPARTMENT, CLERMONT COUNTY, OHIO

ELECTRICAL
ONE LINE DIAGRAM, MCC ELEVATIONS & PANELBOARD SCHEDULE

NTS
VERIFY SCALE
BAR IS ONE INCH ON ORIGINAL DRAWING.
0 1"

DATE	2017-03-31
PROJ	652379
DWG	E-004
SHEET	56 of 91

REUSE OF DOCUMENTS: THIS DOCUMENT, AND THE IDEAS AND DESIGNS INCORPORATED HEREIN, AS AN INSTRUMENT OF PROFESSIONAL SERVICE IS THE PROPERTY OF CH2M HILL AND IS NOT TO BE USED, IN WHOLE OR IN PART, FOR ANY OTHER PROJECT WITHOUT THE WRITTEN AUTHORIZATION OF CH2M HILL.
©CH2M HILL 2015. ALL RIGHTS RESERVED.

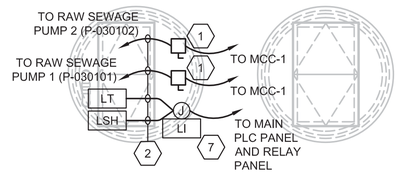

RAW SEWAGE PUMP STATION TOP POWER PLAN

1/4"=1'-0"

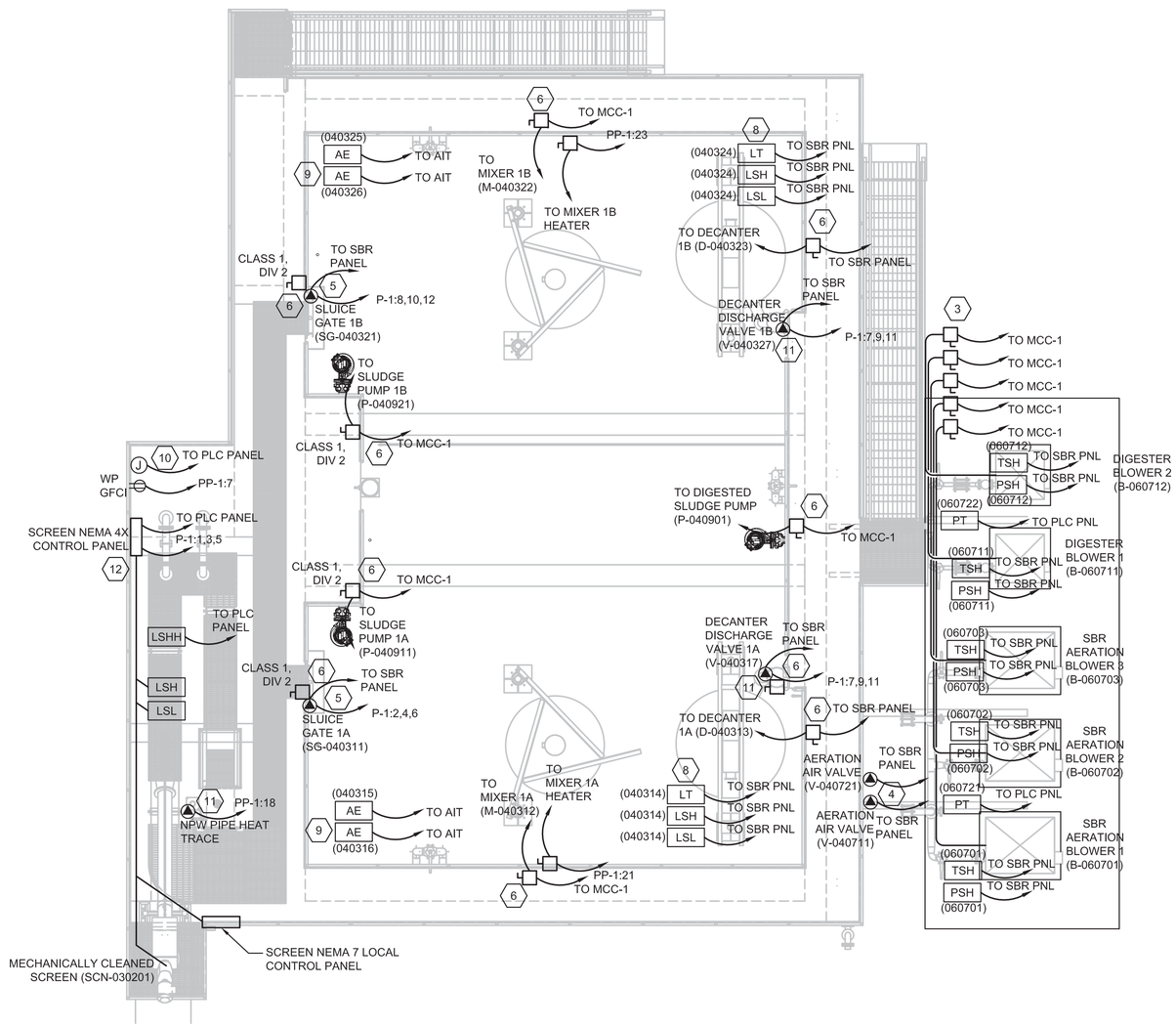

SCREEN/SEQUENSING BATCH REACTOR LIGHTING AND POWER PLAN

1/4"=1'-0"

GENERAL SHEET NOTES

A. COORDINATE DEVICE LOCATIONS, QUANTITY OF CABLES, AND INSTALLATION REQUIREMENTS FOR ALL SBR RELATED ELECTRICAL DEVICES AND EQUIPMENT WITH THE SBR VENDOR. SEE DRAWINGS IC-004 AND 2/E-009 FOR ADDITIONAL INFORMATION.

B. DISCONNECTS MOUNTED TO RAILING PER DETAIL 3/E-0011

C. SEAL ALL RACEWAYS PER NEC WHERE PASSING THROUGH CLASS 1/DIV II BOUNDARY. CLASSIFIED AREA EXTENDS 10' FROM OPEN INFLUENT CHANNEL AND RELATED EQUIPMENT, AND 18" ABOVE TOP OF SBR TANKS, AND IN AN 18" ENVELOPE ON SBR WALKWAYS, DOWN SIDES OF SBD STRUCTURE AND 18" ABOVE GRADE FOR 10' FROM SIDES OF SBR STRUCTURE..

SHEET KEYNOTES

1. FOR EACH MOTOR PROVIDE NON-FUSED DISCONNECT, MOTOR POWER CABLE TERMINATION BOX, THERMAL/MOISTURE MOTOR CABLE TERMINATION BOX, AND LOCAL MOTOR CONTROL STATION. MOTOR POWER JUNCTION BOX SHALL BE PERMANENTLY WIRED TO THE RELATED NON-FUSED DISCONNECT. MOTOR REMOVAL SHALL ONLY REQUIRE CABLE DISCONNECTION AT THE TERMINALS IN THE TWO JUNCTION BOXES. PROVIDE KELLUM GRIPS ON CABLES TO MOTORS. TERMINALS IN JUNCTION BOX TO MATCH MOTOR WIRING TEMPERATURE RATING. MOTOR JUNCTION BOX, CONTROL STATION AND NON-FUSED DISCONNECT SWITCH SHALL BE RIGIDLY MOUNTED ON STAINLESS STEEL SUPPORT STRUCTURE PER DETAIL 9/E-0011.
2. CABLES TO PUMPS AND INSTRUMENTS THROUGH SLEEVES IN SLAB. INSTALL CONDUIT SEALING BUSHING, EQUAL TO O-Z GEDNEY TYPE CSB-SEG, IN SLEEVE. COORDINATION WITH THE GENERAL CONTRACTOR IS REQUIRED. SIZE OF SLEEVE SHALL BE COORDINATED WITH SIZE OF CABLES TO BE INSTALLED.
3. MOUNT FIVE BLOWER MOTOR DISCONNECTS ON A COMMON SUPPORT STRUCTURE PER DETAIL 9/E-0011.
4. PROVIDE POWER AND CONTROL CONNECTION TO AIR CONTROL VALVES PER SBR MANUFACTURER. SEE IC-004 AND E-009
5. PROVIDE POWER AND CONTROL CONNECTION TO SLIDE GATE ACTUATOR.
6. NON-FUSED DISCONNECT SWITCH W/ JUNCTION BOX MOUNTED UNDERNEATH. MOTOR POWER JUNCTION BOX SHALL BE PERMANENTLY WIRED TO THE NON-FUSED DISCONNECT. ADDITIONALLY, FOR SUBMERSIBLE MOTORS ONLY, PROVIDE ADDITIONAL THERMAL/MOISTURE MOTOR CABLE TERMINATION BOX ADJACENT TO MOTOR POWER JUNCTION BOX, PERMANENTLY WIRED TO THE RELATED RELAYS. MOTOR REMOVAL SHALL ONLY REQUIRE CABLE DISCONNECTION AT THE TERMINALS IN THE JUNCTION BOX. PROVIDE KELLUM GRIPS ON CABLES TO MOTORS.
7. PROVIDE JUNCTION BOX ADJACENT TO MOTOR DISCONNECTS ABOVE WET WELL. WIRE LT AND LSH IN WET WELL TO TERMINALS IN JUNCTION BOX. MOUNT LI ON JUNCTION BOX. PROVIDE WIRING FROM ALL DEVICES BACK TO PLC PANEL PER DRAWING IC-003.
8. INSTALL SBR INSTRUMENTS PER SBR MANUFACTURER INSTRUCTIONS, WIRE TO SBR CONTROL PANEL.
9. INSTALL DO AND ORP INSTRUMENTS PER DETAILS. WIRE TO AIT IN TERTIARY FILTER AND DISINFECTION BUILDING.
10. PROVIDE EMPTY JUNCTION BOX WITH BLANK FACEPLATE FOR CONNECTION TO FUTURE INFLUENT SAMPLER. ROUTE 3/4" CONDUIT WITH PULL STRING TO PLC PANEL AND IDENTIFY AT PANEL AND HANDHOLES. LOCATED ASSOCIATED RECEPTACLE MORE THAN 10' FROM INFLUENT CHANNEL.
11. POWER TO NPW PIPE SELF LIMITED HEAT TRACE. PROVIDE LINE VOLTAGE AMBIENT TEMPERATURE THERMOSTAT TO CONTROL TRACING.
12. INSTALL FINE SCREEN PANELS AND RELATED INSTRUMENTS. PROVIDE ALL INTERCONNECTING WIRING AND RACEWAYS FOR A FULLY OPERATIONAL SYSTEM. ALL DEVICES NOT SHOWN, SEE IC-003 FOR ADDITIONAL INFORMATION AND COORDINATE WITH VENDOR REQUIREMENTS.

STATE OF OHIO CHRISTOPHER C. ROBERTSON 69219 4-31-17 REGISTERED PROFESSIONAL ENGINEER

NO.	DATE	REVISION	BY	APVD

DSGN C ROBERTSON | DR C ROBERTSON | CHK J MOORMAN | APVD C ROBERTSON

VILLAGE OF NEWTONSVILLE
WASTEWATER TREATMENT PLANT & COLLECTION SYSTEM - PART A
CLERMONT COUNTY WATER RESOURCES DEPARTMENT, CLERMONT COUNTY, OHIO

ELECTRICAL
RAW SEWAGE PUMP STATION, SCREEN/SEQUENCING BATCH REACTOR AND BLOWER POWER PLANS

VARIES
VERIFY SCALE
BAR IS ONE INCH ON ORIGINAL DRAWING.
0 1"

DATE	2017-03-31
PROJ	652379
DWG	E-005
SHEET	57 of 91

REUSE OF DOCUMENTS: THIS DOCUMENT, AND THE IDEAS AND DESIGNS INCORPORATED HEREIN, AS AN INSTRUMENT OF PROFESSIONAL SERVICE IS THE PROPERTY OF CH2M HILL AND IS NOT TO BE USED, IN WHOLE OR IN PART, FOR ANY OTHER PROJECT WITHOUT THE WRITTEN AUTHORIZATION OF CH2M HILL.
©CH2M HILL 2015. ALL RIGHTS RESERVED.

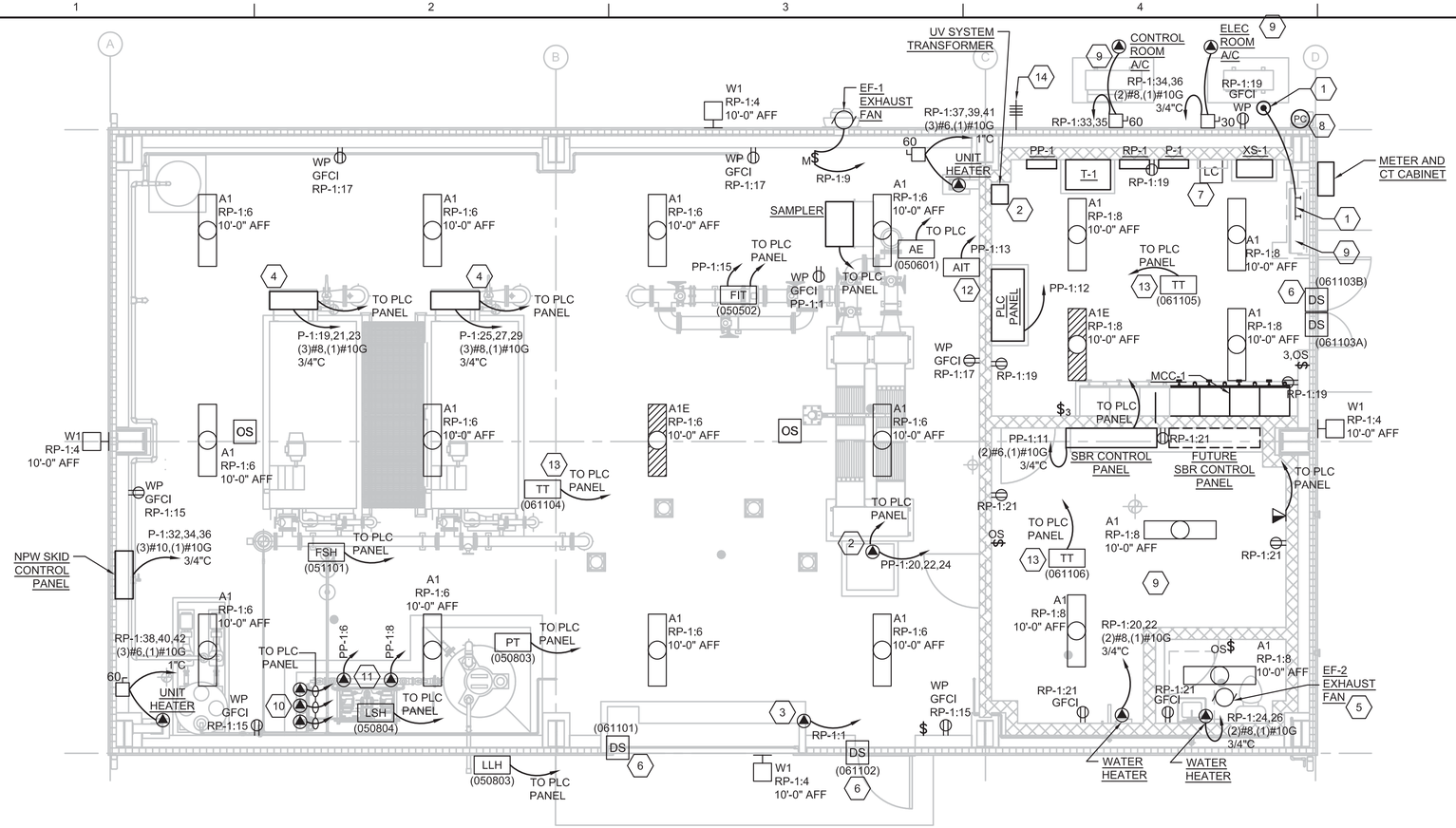

POWER AND LIGHTING PLAN

1/4"=1'-0"

GENERAL SHEET NOTES

A. CONNECT FIXTURES DESIGNATED AS A NIGHT LIGHT TO AN UNSWITCHED LEG OF THE LOCAL LIGHTING CIRCUIT.

SHEET KEYNOTES

1. PROVIDE GROUND ROD, GROUNDING ELECTRODE CONDUCTOR AND GROUND BUS. BOND ALL AVAILABLE GROUNDING ELECTRODES TO GROUND BUS. RUN GROUNDING ELECTRODE CONDUCTOR FROM GROUND BUS TO TO SERVICE ENTRANCE SWITCH XS-1.
2. PROVIDE POWER AND CONTROL CONNECTION TO UV EQUIPMENT. INSTALL AND ROUTE BRANCH CIRCUIT THROUGH ISOLATION TRANSFORMER PROVIDED BY UV VENDOR.
3. CONNECT POWER TO OVERHEAD DOOR OPERATOR. INSTALL DOOR OPERATOR PER DOOR MANUFACTURERS INSTRUCTIONS.
4. FILTER CONTROL PANEL, MAKE ALL FIELD WIRING CONNECTIONS TO BRANCH CIRCUIT, PLC CONNECTION, WIRING TO WASTE PUMP. SEE SCHEMATIC DIAGRAM (3)E-008 AND IC-005 FOR MORE INFORMATION.
5. CONNECT EXHAUST FAN EF-2 TO LOAD SIDE OF RESTROOM LIGHT SWITCH TO COME ON/OFF WITH LIGHT, CKT RP-1:8.
6. DOOR SWITCH TO MONITOR DOOR POSITION. CONNECT TO PLC PANEL.
7. PROVIDE LIGHTING CONTACTOR WITH 4 OUTPUT RELAYS, AND HOA SWITCH WITH AUX CONTACT ON 'AUTO' POSITION. SEE DRAWING IC-005 FOR CONNECTIONS TO PLC PANEL. CONNECT CIRCUITS RP-1:2 AND RP-1:4 THROUGH CONTACTOR TO CONTROL EXTERIOR LIGHTS.
8. PROVIDE 120V LINE VOLTAGE PHOTOCELL AND WIRE OUTPUT RELAY TO PLC PANEL. POWER FROM CIRCUIT RP-1:2.
9. PROVIDE WIRING FOR POWER AND CONTROL FROM EXTERIOR TO INTERIOR SPLIT SYSTEM UNITS PER MANUFACTURERS INSTRUCTIONS.
10. SBR ALUM VALVES A, B AND C. CONNECT TO PLC PANEL.
11. PROVIDE POWER AND CONTROL CONNECTIONS TO CHEMICAL METERING PUMPS.
12. PROVIDE POWER AND WIRING CONNECTIONS TO AIT (041101), SEE DRAWING IC-004.
13. COORDINATE EXACT LOCATION OF THERMOSTAT WITH OWNER PRIOR TO INSTALLATION.
14. COMMUNICATION ANTENNA, WIRED BACK TO PLC PANEL.

PANELBOARD PP-1 | VOLTAGE: 208Y/120V | PHASE: 3 | WIRE: 4
MOUNTING: SURFACE | MAINS: MAIN CIRCUIT BREAKER | BUS: 100A | MAINS LOCATION: BOTTOM ENTRY
COVER: NEMA 1 | TRIP: 100A | NEUTRAL: 200%
UL LISTED BREAKER INTERRUPTING CAPACITY: 14K A RMS. SYM. MIN.

LOAD (KVA)	DESCRIPTION	CKT.		L1	L2	L3		CKT.	DESCRIPTION	LOAD (KVA)	PHASE LOAD KVA L1	L2	L3
0.77	EFFLUENT SAMPLER	1	20/1				20/1	2	UV BANK 1A SYSTEM MONITOR	0.71	1.47		
0.14	SLIDE GATE 1 CONTROL MODULE	3	20/1				20/1	4	UV BANK 1B SYSTEM MONITOR	0.71		0.85	
0.14	SLIDE GATE 2 CONTROL MODULE	5	20/1				20/1	6	CHEMICAL METERING PUMP 1	0.22			0.36
0.29	FUTURE INFLUENT SAMPLER	7	20/1				20/1	8	CHEMICAL METERING PUMP 2	0.22	0.51		
	SPARE	9	20/1				20/1	10	EFFLUENT SAMPLER	0.29		0.29	
3.60	SBR Control Panel	11	45/1				20/1	12	PLC Panel	1.18			4.78
0.12	MULTI-PARAMETER ANALYZER (AIT/041101)	13	20/1				20/1	14	GENERATOR BATTERY CHARGER	1.00	1.12		
	FIT FOR UV	15	20/1				20/1	16	GENERATOR JACKET HEATER	1.00		1.00	
0.90	UV BANK 1A POWER	17	20/1				20/1	18	NPW PIPE HEAT TRACING AT SCREEN	0.12			1.02
0.90	UV BANK 1B POWER	19	20/1				20/1	20			0.90		
0.06	MIXER 1A HEATER	21	20/1				20/1	22				0.06	
0.06	MIXER 1B HEATER	23	20/1				20/1	24					0.06
		25	20/1				20/1	26			0.00		
		27	20/1				20/1	28				0.00	
		29	20/1				20/1	30					0.00
		31	20/1				20/1	32			0.00		
		33	20/1				20/1	34				0.00	
		35	20/1				20/1	36					0.00
		37	20/1				20/1	38			0.00		
		39	20/1				20/1	40				0.00	
		41	20/1				20/1	42					0.00
										TOTAL			
									CONNECTED LOAD (kVA)	12.4	4.0	2.2	6.2
									CONNECTED LOAD (AMPS)	34.5			
									DEMAND LOAD (kVA)	12.4			
									DEMAND LOAD (AMPS)	34.5			

PANEL PP-1 SCHEDULE

NTS

PANELBOARD RP-1 | VOLTAGE: 208Y/120V | PHASE: 3 | WIRE: 4
MOUNTING: SURFACE | MAINS: MAIN CIRCUIT BREAKER | BUS: 225A | MAINS LOCATION: BOTTOM ENTRY
COVER: NEMA 1 | TRIP: 225A | NEUTRAL: 200%
UL LISTED BREAKER INTERRUPTING CAPACITY: 14K A RMS. SYM. MIN.

LOAD (KVA)	DESCRIPTION	CKT.		L1	L2	L3		CKT.	DESCRIPTION	LOAD (KVA)	PHASE LOAD KVA L1	L2	L3
1.20	MOTOR OPERATED DOOR	1	20/1				20/1	2	SITE LIGHTING - POLES	0.42	1.62		
	SPARE	3	20/1				20/1	4	BUILDING EXTERIOR LIGHTS	0.12		0.12	
	SPARE	5	20/1				20/1	6	EQUIPMENT ROOM LIGHTS	0.74			0.74
	SPARE	7	20/1				20/1	8	ELEC. CONTROL, RESTROOM LIGHTS	0.43	0.43		
0.53	EQUIPMENT ROOM EXH FAN EF-1	9	20/1				20/1	10	SPARE			0.53	
	SPARE	11	20/1				20/1	12	SPARE				0.00
	SPARE	13	20/1				20/1	14	SPARE		0.00		
0.54	RECEPTACLES EQUIPMENT ROOM	15	20/1				20/1	16	SPARE			0.54	
0.54	RECEPTACLES EQUIPMENT ROOM	17	20/1				20/1	18	SPARE				0.54
0.54	RECEPTACLES ELEC ROOM	19	20/1				40/2	20	INSTANTANEOUS WATER HEATER	4.16	4.70		
0.90	RECEPTACLES CONTROL, RESTROOM	21	20/1					22		4.16		5.06	
	SPARE	23	20/1				40/2	24	INSTANTANEOUS WATER HEATER	4.16			4.16
	SPARE	25	20/1					26		4.16	4.16		
	SPARE	27	20/1				20/1	28	SPARE			0.00	
	SPARE	29	20/1				20/1	30	SPARE				0.00
	SPARE	31	20/1				20/1	32	SPARE		0.00		
1.25	OFFICE - AIR CONDITIONER	33	15/2				40/2	34	ELEC ROOM SPLIT SYSTEM	2.80		3.85	
1.25		35						36		2.80			3.85
4.39	UNIT HEATER EUH-1	37	50/3				50/3	38	UNIT HEATER EUH-2	4.39	8.78		
4.39		39						40		4.39		8.78	
4.39		41						42		4.39			8.78
										TOTAL			
									CONNECTED LOAD (kVA)	56.6	19.7	18.9	18.1
									CONNECTED LOAD (AMPS)	157.2			
									DEMAND LOAD (kVA)	56.6			
									DEMAND LOAD (AMPS)	157.2			

PANEL RP-1 SCHEDULE

NTS

NO.	DATE	REVISION	BY	APVD

DSGN C ROBERTSON | DR C ROBERTSON | CHK J MOORMAN | APVD C ROBERTSON

VILLAGE OF NEWTONSVILLE
WASTEWATER TREATMENT PLANT & COLLECTION SYSTEM - PART A
CLERMONT COUNTY WATER RESOURCES DEPARTMENT, CLERMONT COUNTY, OHIO

ELECTRICAL
TERTIARY FILTER AND DISINFECTION BUILDING POWER AND LIGHTING PLANS

1/4"=1'-0"
VERIFY SCALE
BAR IS ONE INCH ON ORIGINAL DRAWING.

DATE	2017-03-31
PROJ	652379
DWG	E-006
SHEET	58 of 91

REUSE OF DOCUMENTS: THIS DOCUMENT, AND THE IDEAS AND DESIGNS INCORPORATED HEREIN, AS AN INSTRUMENT OF PROFESSIONAL SERVICE IS THE PROPERTY OF CH2M HILL AND IS NOT TO BE USED, IN WHOLE OR IN PART, FOR ANY OTHER PROJECT WITHOUT THE WRITTEN AUTHORIZATION OF CH2M HILL.
©CH2M HILL 2015. ALL RIGHTS RESERVED.

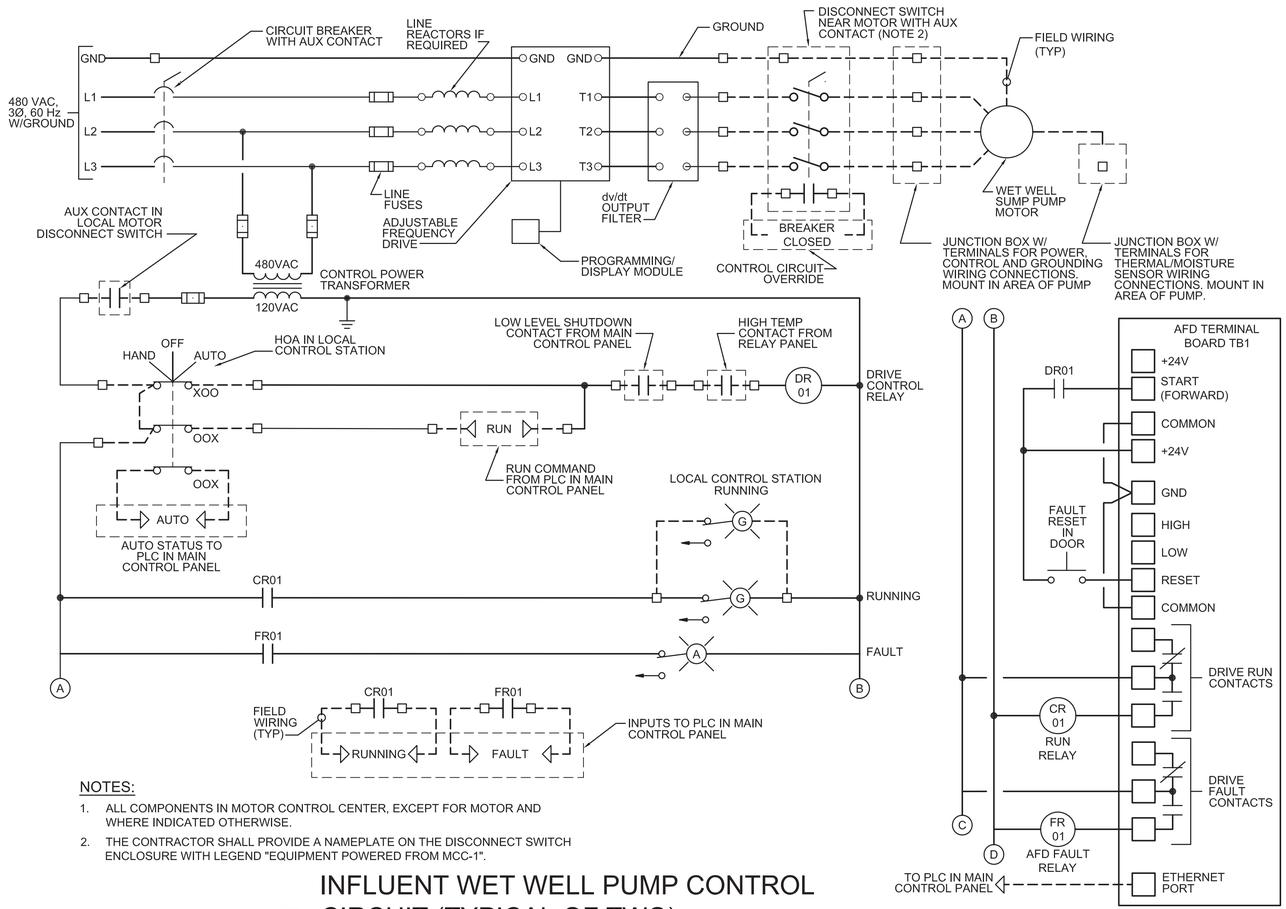

NOTES:

1. ALL COMPONENTS IN MOTOR CONTROL CENTER, EXCEPT FOR MOTOR AND WHERE INDICATED OTHERWISE.
2. THE CONTRACTOR SHALL PROVIDE A NAMEPLATE ON THE DISCONNECT SWITCH ENCLOSURE WITH LEGEND "EQUIPMENT POWERED FROM MCC-1".

1 INFLUENT WET WELL PUMP CONTROL CIRCUIT (TYPICAL OF TWO)

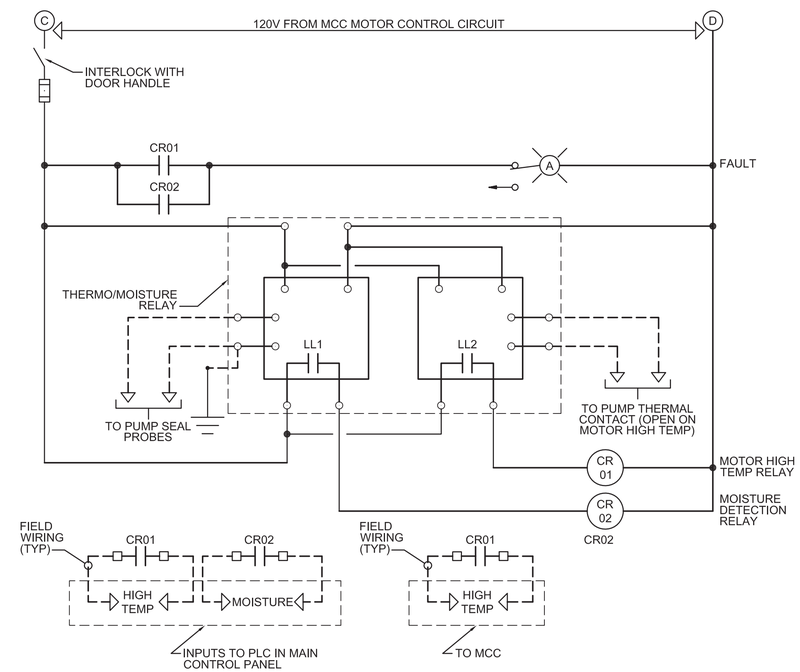

2 INFLUENT WET WELL PUMP RELAY PANEL

NO.	DATE	REVISION	BY	APVD

DSGN C ROBERTSON | DR C ROBERTSON | CHK J MOORMAN | APVD C ROBERTSON

VILLAGE OF NEWTONSVILLE
WASTEWATER TREATMENT PLANT & COLLECTION SYSTEM - PART A
CLERMONT COUNTY WATER RESOURCES DEPARTMENT, CLERMONT COUNTY, OHIO

ELECTRICAL
CONTROL DIAGRAMS
RAW SEWAGE PUMPS & RELAY PANEL

NTS
VERIFY SCALE
BAR IS ONE INCH ON ORIGINAL DRAWING.
0 1"

DATE	2017-03-31
PROJ	652379
DWG	E-007
SHEET	59 of 91

REUSE OF DOCUMENTS: THIS DOCUMENT, AND THE IDEAS AND DESIGNS INCORPORATED HEREIN, AS AN INSTRUMENT OF PROFESSIONAL SERVICE IS THE PROPERTY OF CH2M HILL AND IS NOT TO BE USED, IN WHOLE OR IN PART, FOR ANY OTHER PROJECT WITHOUT THE WRITTEN AUTHORIZATION OF CH2M HILL.
©CH2M HILL 2015. ALL RIGHTS RESERVED.

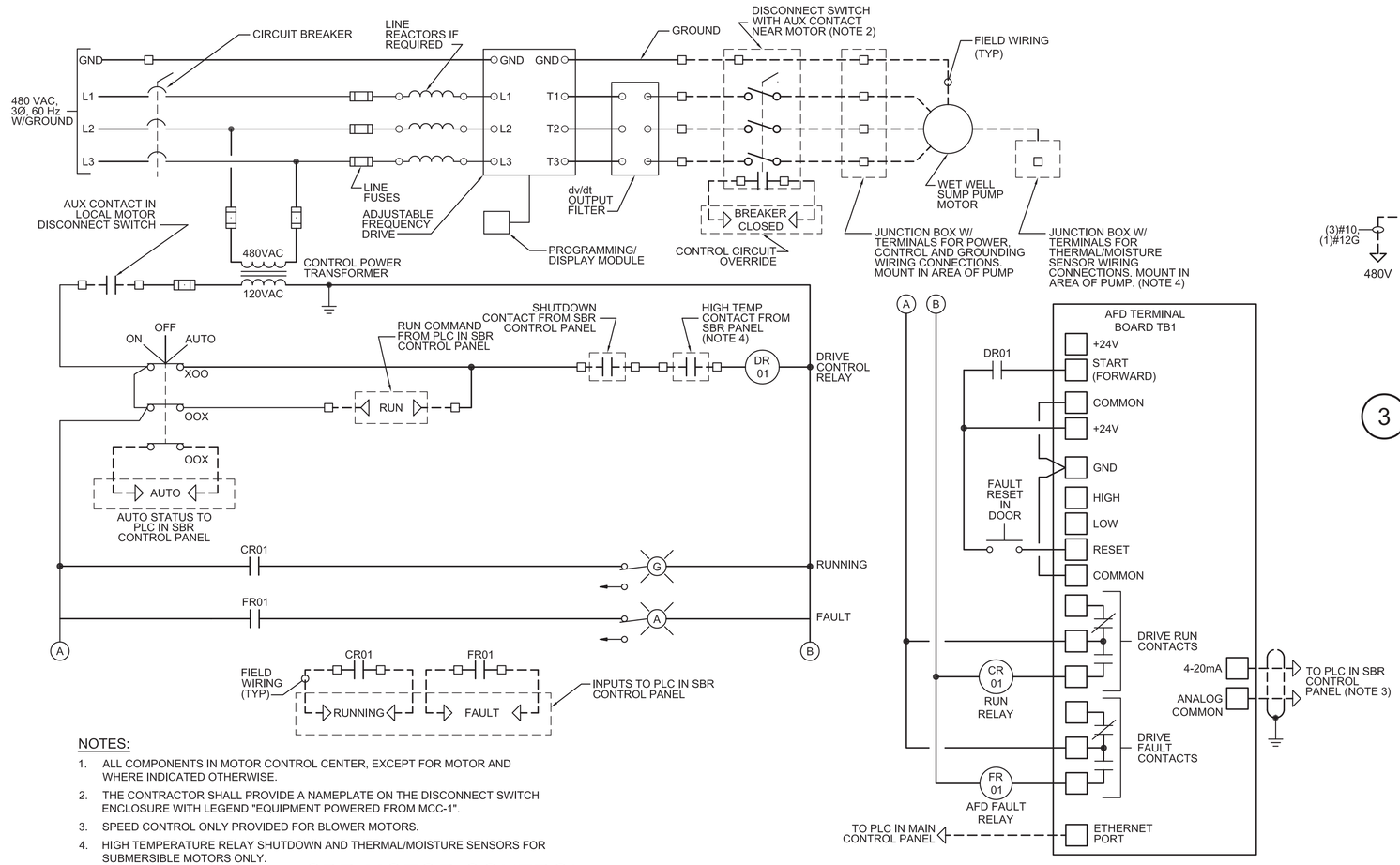

NOTES:

1. ALL COMPONENTS IN MOTOR CONTROL CENTER, EXCEPT FOR MOTOR AND WHERE INDICATED OTHERWISE.
2. THE CONTRACTOR SHALL PROVIDE A NAMEPLATE ON THE DISCONNECT SWITCH ENCLOSURE WITH LEGEND "EQUIPMENT POWERED FROM MCC-1".
3. SPEED CONTROL ONLY PROVIDED FOR BLOWER MOTORS.
4. HIGH TEMPERATURE RELAY SHUTDOWN AND THERMAL/MOISTURE SENSORS FOR SUBMERSIBLE MOTORS ONLY.

1 SBR MOTOR CONTROL CIRCUIT (TYPICAL OF 10)

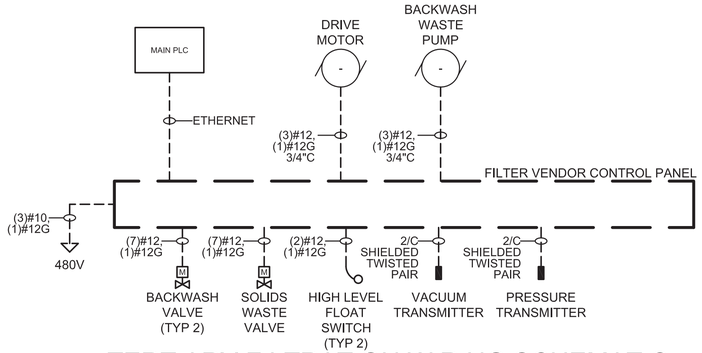

3 TERTIARY FILTRATION WIRING SCHEMATIC (TYPICAL OF 2)

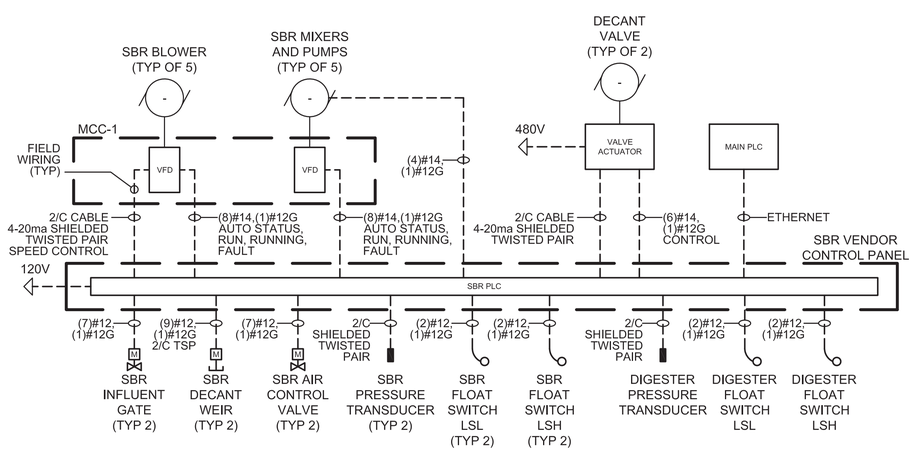

2 SBR CONTROL WIRING SCHEMATIC

NO.	DATE	REVISION	BY	APVD

DSGN C ROBERTSON | DR C ROBERTSON | CHK J MOORMAN | APVD C ROBERTSON

VILLAGE OF NEWTONSVILLE
WASTEWATER TREATMENT PLANT & COLLECTION SYSTEM - PART A
CLERMONT COUNTY WATER RESOURCES DEPARTMENT, CLERMONT COUNTY, OHIO

ELECTRICAL
CONTROL DIAGRAMS SEQUENCING BATCH REACTOR - PUMPS, MIXERS AND TERITARY FILTRATION

NTS
VERIFY SCALE
BAR IS ONE INCH ON ORIGINAL DRAWING.
0 1"

DATE	2017-03-31
PROJ	652379
DWG	E-008
SHEET	60 of 91

REUSE OF DOCUMENTS: THIS DOCUMENT, AND THE IDEAS AND DESIGNS INCORPORATED HEREIN, AS AN INSTRUMENT OF PROFESSIONAL SERVICE, IS THE PROPERTY OF CH2M HILL AND IS NOT TO BE USED, IN WHOLE OR IN PART, FOR ANY OTHER PROJECT WITHOUT THE WRITTEN AUTHORIZATION OF CH2M HILL.
©CH2M HILL 2015. ALL RIGHTS RESERVED.

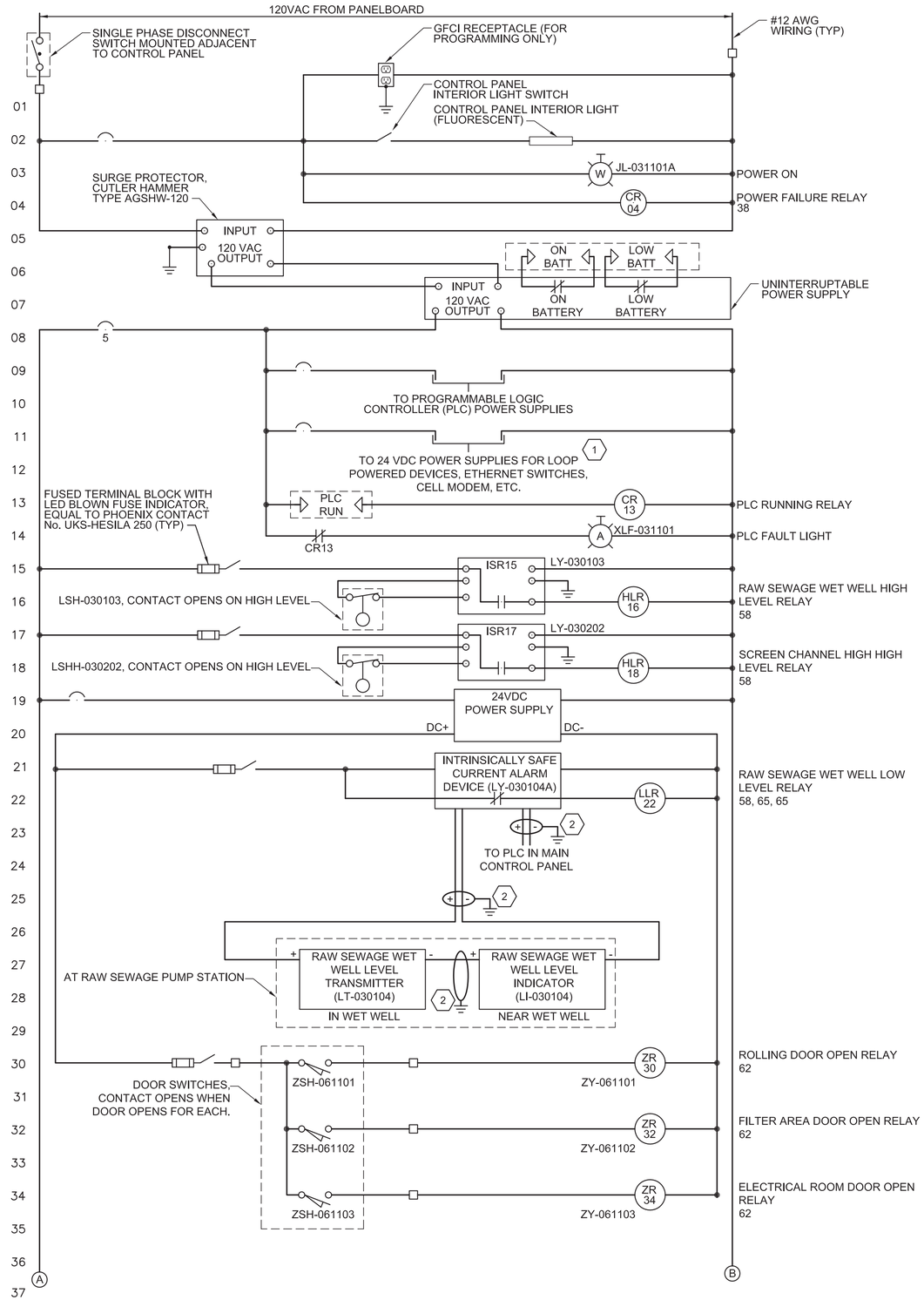

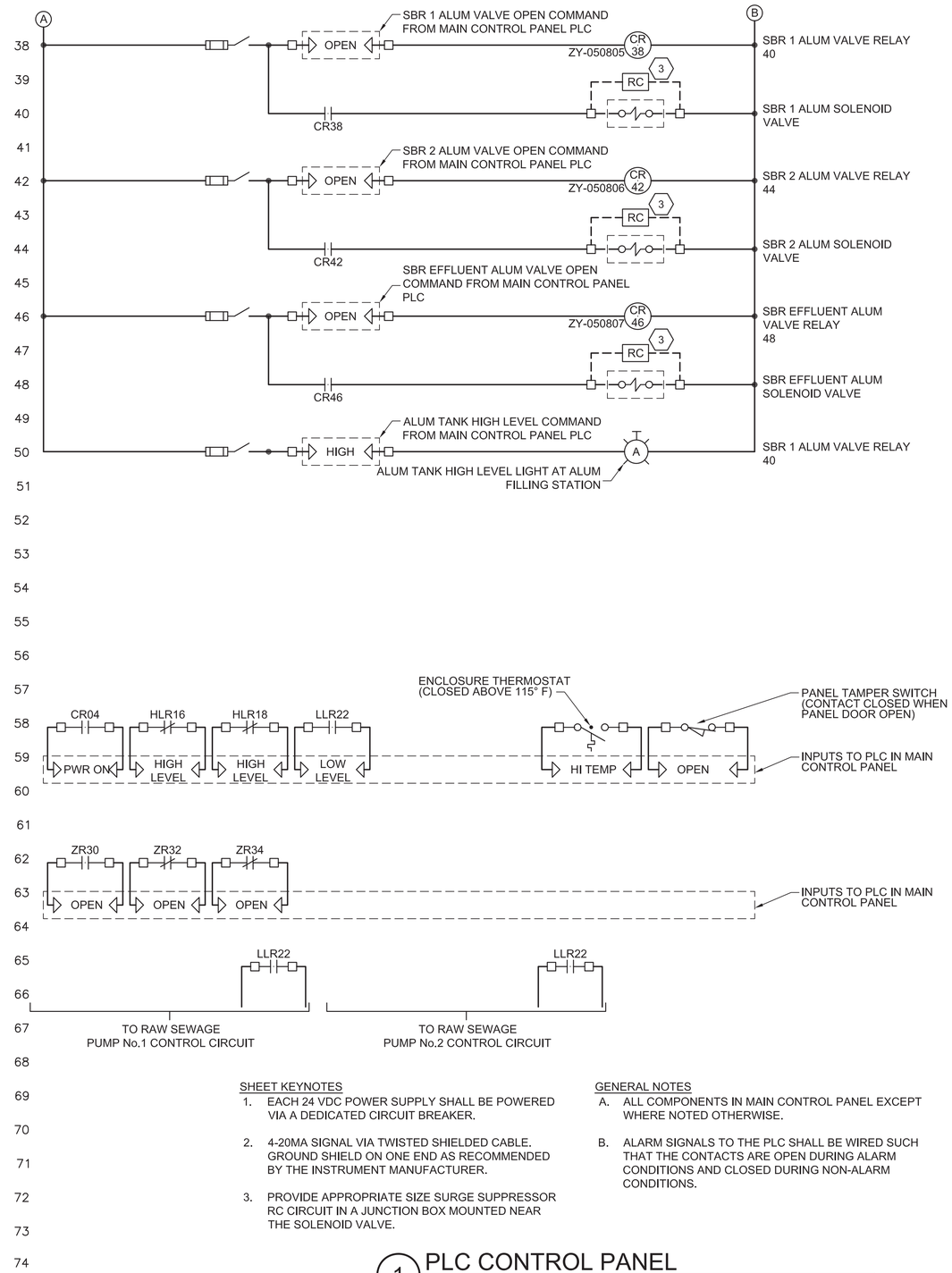

SHEET KEYNOTES

1. EACH 24 VDC POWER SUPPLY SHALL BE POWERED VIA A DEDICATED CIRCUIT BREAKER.
2. 4-20MA SIGNAL VIA TWISTED SHIELDED CABLE. GROUND SHIELD ON ONE END AS RECOMMENDED BY THE INSTRUMENT MANUFACTURER.
3. PROVIDE APPROPRIATE SIZE SURGE SUPPRESSOR RC CIRCUIT IN A JUNCTION BOX MOUNTED NEAR THE SOLENOID VALVE.

GENERAL NOTES

A. ALL COMPONENTS IN MAIN CONTROL PANEL EXCEPT WHERE NOTED OTHERWISE.
B. ALARM SIGNALS TO THE PLC SHALL BE WIRED SUCH THAT THE CONTACTS ARE OPEN DURING ALARM CONDITIONS AND CLOSED DURING NON-ALARM CONDITIONS.

1 PLC CONTROL PANEL

NO.	DATE	REVISION	BY	APVD

DSGN C ROBERTSON | DR C ROBERTSON | CHK J MOORMAN | APVD C ROBERTSON

VILLAGE OF NEWTONSVILLE
WASTEWATER TREATMENT PLANT & COLLECTION SYSTEM - PART A
CLERMONT COUNTY WATER RESOURCES DEPARTMENT, CLERMONT COUNTY, OHIO

ELECTRICAL
CONTROL DIAGRAMS
PLC CONTROL PANEL

NTS
VERIFY SCALE
BAR IS ONE INCH ON ORIGINAL DRAWING. 0 1"

DATE	2017-03-31
PROJ	652379
DWG	E-009
SHEET	61 of 91

REUSE OF DOCUMENTS: THIS DOCUMENT, AND THE IDEAS AND DESIGNS INCORPORATED HEREIN, AS AN INSTRUMENT OF PROFESSIONAL SERVICE, IS THE PROPERTY OF CH2M HILL AND IS NOT TO BE USED, IN WHOLE OR IN PART, FOR ANY OTHER PROJECT WITHOUT THE WRITTEN AUTHORIZATION OF CH2M HILL.
©CH2M HILL 2015. ALL RIGHTS RESERVED.

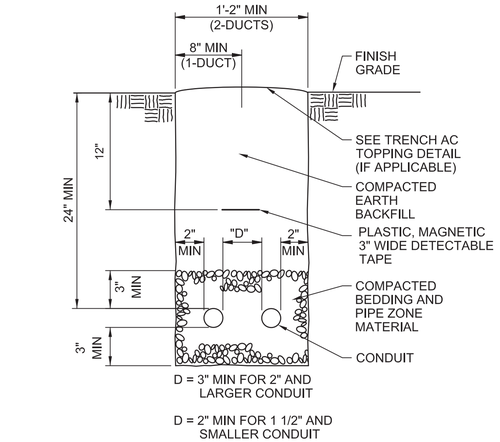

1 DIRECT BURIAL LIGHTING CONDUIT

NTS

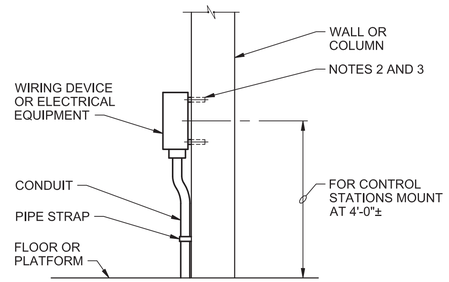

NOTES:

1. ALL MOUNTING HARDWARE SHALL BE STAINLESS STEEL. USE WASHER AND SPLIT-LOCK WASHERS UNDER ALL NUTS.
2. ON CONCRETE WALLS USE STAINLESS STEEL CONCRETE ANCHORS. MOUNT ENCLOSURE ON 1/2" SPACERS OF 1/2" SCHEDULE 80 PVC CONDUIT.
3. BOXES 6 INCHES SQUARE AND LESS SHALL BE SUPPORTED BY TWO ANCHORS. LARGER BOXES SHALL BE SUPPORTED BY AT LEAST FOUR.

2 DEVICE MOUNTING, WALL OR COLUMN

NTS

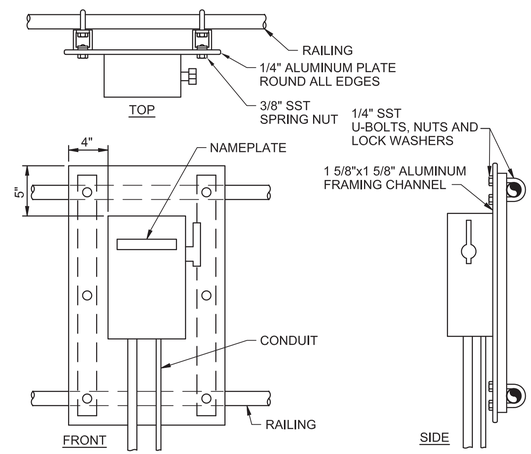

3 DEVICE MOUNTING NON-FUSED DISC.

NTS

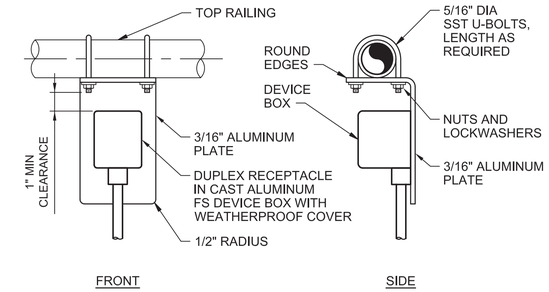

NOTES:

1. THIS DETAIL SHALL BE USED FOR MOUNTING OF ALL WIRING DEVICES AND JUNCTION BOXES 4 INCHES SQUARE AND LESS ON RAILING WHETHER DETAIL IS CALLED OUT OR NOT.
2. ALL HARDWARE TO BE STAINLESS STEEL. USE WASHER AND SPLIT LOCKWASHERS WITH ALL NUTS.
3. ALL EDGES AND THE ENDS OF ALL U-BOLTS WHICH HAVE BEEN CUT SHALL BE FILED SMOOTH.

4 DEVICE MOUNTING, AT RAILING

NTS

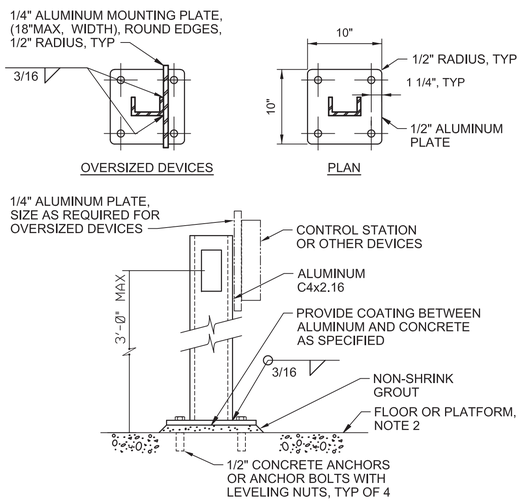

NOTES:

1. USE STAINLESS STEEL MOUNTING HARDWARE. USE WASHERS AND SPLIT-LOCK WASHERS UNDER ALL NUTS.
2. FOR YARD LOCATIONS, PROVIDE 2'-0" SQUARE x 6" THICK CONCRETE PAD AT GRADE WITH 3#4 REBAR EACH WAY, CENTERED.
3. CONTROL STATIONS DEVICES AND EQUIPMENT HAVING A FRONTAL AREA NOT GREATER THAN 2'-0" SQ FT SHALL BE PEDESTAL MOUNTED UNLESS OTHERWISE INDICATED.

5 DEVICE MOUNTING, MOTOR CONTROL STATION

NTS

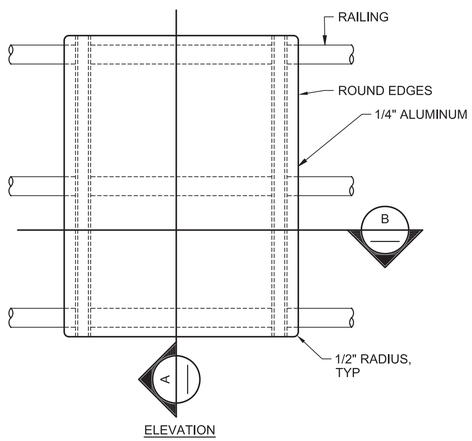

NOTES:

1. ALL HARDWARE SHALL BE STAINLESS STEEL. USE WASHERS AND SPLIT-LOCK WASHERS ON ALL NUTS AND BOLTS.
2. DIMENSIONS SHALL BE AS REQUIRED FOR EQUIPMENT TO BE MOUNTED. EDGE OF MOUNTING PLATE SHALL EXTEND A MINIMUM OF 2 INCHES EACH SIDE OF THE MOUNTED EQUIPMENT.
3. THIS DETAIL SHALL BE USED FOR MOUNTING EQUIPMENT AND JUNCTION BOXES WEIGHING LESS THAN 50 LBS ON RAILING WHETHER DETAIL IS CALLED OUT OR NOT. EQUIPMENT MOUNTING SHALL NOT REDUCE THE WIDTH OF A WALKWAY TO LESS THAN 3'-0".
4. SEE DETAIL 7 THIS SHEET FOR SECTION VIEWS.

6 DEVICE MOUNTING, RAIL MOUNTED EQUIPMENT SUPPORT

NTS

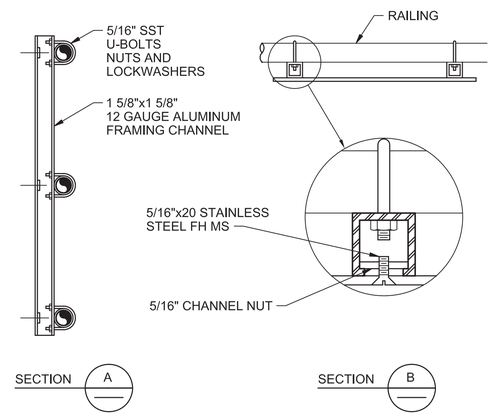

7 DEVICE MOUNTING, RAIL MOUNTED EQUIPMENT SUPPORT SECTIONS

NTS

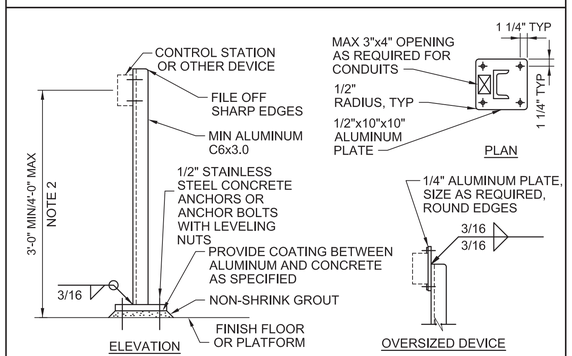

NOTES:

1. ALL MOUNTING HARDWARE SHALL BE STAINLESS STEEL. USE WASHERS AND SPLIT-LOCK WASHERS UNDER ALL NUTS AND BOLTS.
2. FOR HEIGHTS EXCEEDING 4'-0" OR WEIGHTS OF MOUNTED EQUIPMENT EXCEEDING 200 LBS, SIZE POST AND CONNECTION FOR LATERAL LOADS. EXTEND POSTS TO STRUCTURE ABOVE WHERE REQUIRED BY CALCULATION.

8 DEVICE MOUNTING, PEDISTAL

NTS

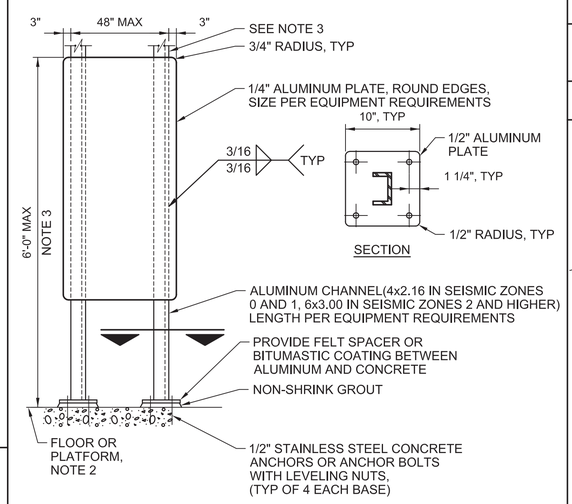

NOTES:

1. USE STAINLESS STEEL MOUNTING HARDWARE. USE WASHER AND SPLIT LOCK WASHER UNDER ALL NUTS.
2. FOR YARD LOCATIONS PROVIDE A 6 INCH THICK CONCRETE PAD AT GRADE WITH #4 BAR @ 12" OC EACH WAY, CENTERED. THE PAD SHALL BE 12 INCHES LONGER THAN THE MOUNTING PLATE BY ONE HALF THE HEIGHT OF THE MOUNTING PLATE ABOVE FINISHED GRADE. MINIMUM WIDTH 24 INCHES.
3. FOR HEIGHTS EXCEEDING 5'-0" OR WEIGHT OF MOUNTED EQUIPMENT EXCEEDING 200 LBS, SIZE POSTS AND CONNECTIONS FOR LATERAL LOADS. EXTEND POSTS TO STRUCTURE ABOVE WHERE REQUIRED BY CALCULATION, SEE GENERAL ELECTRICAL CONSTRUCTION NOTES ON DRAWINGS.

9 DEVICE MOUNTING, EQUIPMENT PEDISTAL

NTS

STATE OF OHIO CHRISTOPHER C. ROBERTSON 69219 4-3-17 REGISTERED PROFESSIONAL ENGINEER

NO.	DATE	REVISION	DR	CHK	APVD	BY	APVD
DSGN	C ROBERTSON		C ROBERTSON	J MOORMAN		C ROBERTSON	

©CH2M HILL 2015. ALL RIGHTS RESERVED.

REUSE OF DOCUMENTS: THIS DOCUMENT, AND THE IDEAS AND DESIGNS INCORPORATED HEREIN, AS AN INSTRUMENT OF PROFESSIONAL SERVICE, IS THE PROPERTY OF CH2M HILL AND IS NOT TO BE USED, IN WHOLE OR IN PART, FOR ANY OTHER PROJECT WITHOUT THE WRITTEN AUTHORIZATION OF CH2M HILL.

Clermont County

VILLAGE OF NEWTONSVILLE
WASTEWATER TREATMENT PLANT & COLLECTION SYSTEM - PART A
CLERMONT COUNTY WATER RESOURCES DEPARTMENT, CLERMONT COUNTY, OHIO

ch2m

ELECTRICAL

TYPICAL DETAILS 1

NTS

VERIFY SCALE

BAR IS ONE INCH ON ORIGINAL DRAWING.
0 1"

DATE	2017-03-31
PROJ	652379
DWG	E-010
SHEET	62 of 91

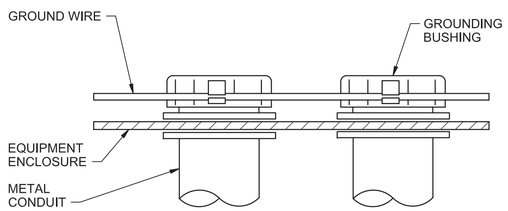

NOTES:
1. THE ENDS OF ALL CONDUITS REQUIRED TO BE GROUNDED BY THE SPECIFICATIONS SHALL BE GROUNDED IN ACCORDANCE WITH THIS DETAIL.

1 CONDUIT GROUNDING
NTS

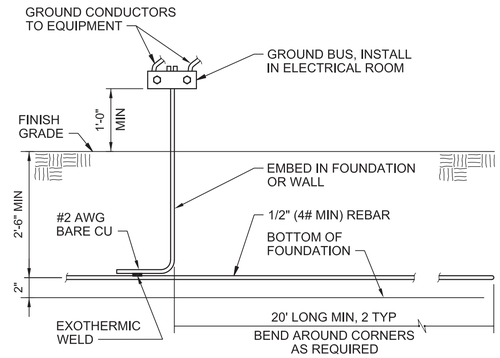

NOTES:
1. BOND ALL REQUIRED ELECTRODES TO GROUND BUS PER NEC (NOT SHOWN)

2 FOUNDATION GROUND ELECTRODE
NTS

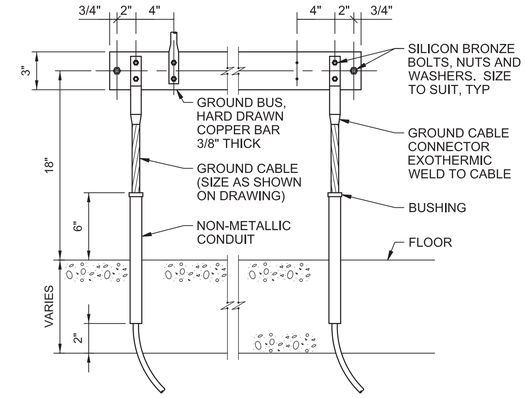

ELEVATION

3 GROUND BUS ELEVATION
NTS

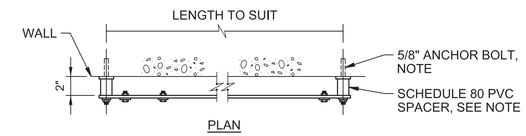

PLAN

NOTES:
1. MAXIMUM SPAN BETWEEN SUPPORTS NOT TO EXCEED 24".

4 GROUND BUS PLAN
NTS

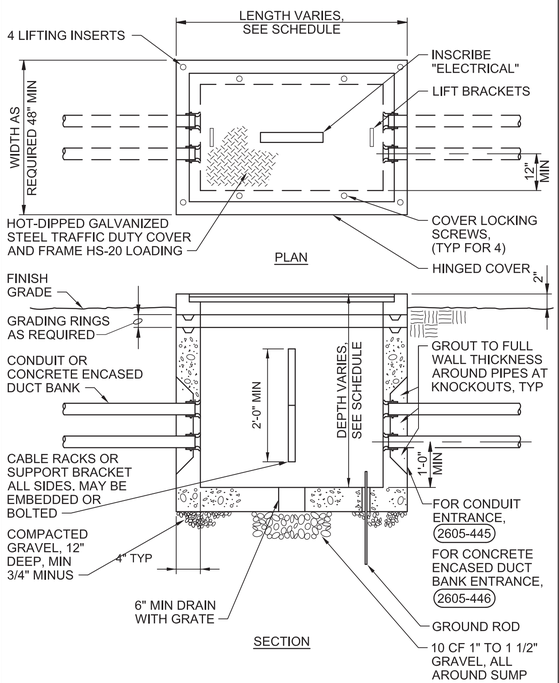

5 HANDHOLE
NTS

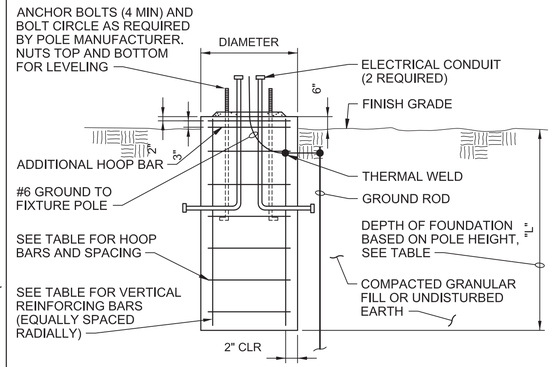

MAX POLE HEIGHT	DIAMETER	"L"	VERTICAL BARS	HOOP BARS
25'	24"	6'	8 - #7	#4 @ 6"

NOTES:
1. USE STAINLESS STEEL NUTS AND LOCKWASHERS.
2. INSTALL TWO CONDUITS (MINIMUM) PER POLE.
3. INSTALL CENTERLINE OF POLE 3'-0" BEHIND THE FACE OF THE CURB.
4. CONDUITS SHALL BE STUBBED UP TO WITHIN SIX INCHES OF THE POLE HANDHOLE.
5. COORDINATE WITH SITE PLANS FOR PROPER ORIENTATION OF POLE.

6 SITE LIGHT POLE FOOTING
NTS

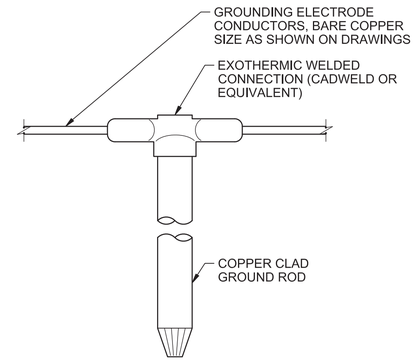

NOTES:
1. TOP OF GROUND ROD SHALL BE SAND BEDDED 6" MIN BELOW GRADE.
2. CONNECTIONS TO GROUNDING ELECTRODE CONDUCTORS SHALL BE CADWELD OR EQUIVALENT.

7 GROUND ROD CONNECTION
NTS

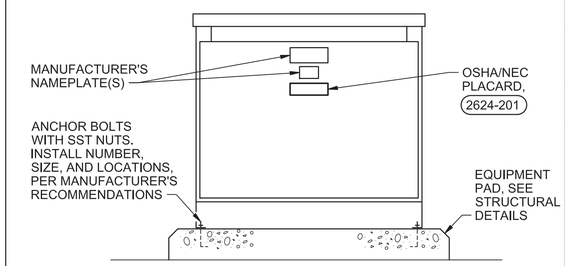

8 TRANSFORMER MOUNTING
NTS

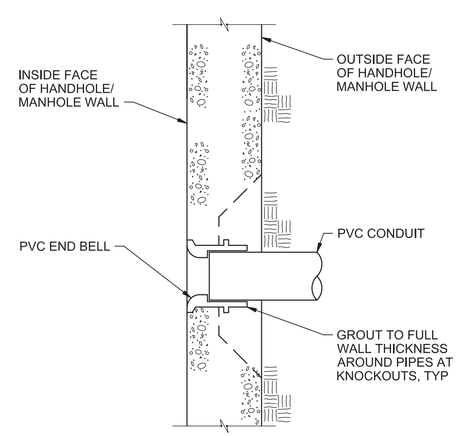

9 HANDHOLE CONDUIT ENTRY
NTS

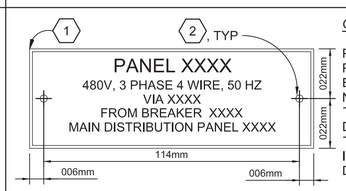

TOP ROW: 009mm LETTERS
OTHER ROWS: 003mm LETTERS
006mm SPACING BETWEEN FIRST 2 ROWS
003mm SPACING BETWEEN OTHER ROWS

COLOR SCHEDULE		
TYPE	BACKGROUND	LETTERING
NORMAL POWER	WHITE	BLACK

REQUIRED DATA

FIRST LINE: PANEL DESIGNATION
SECOND LINE: PHASE, VOLTAGE, FREQUENCY
THIRD LINE: BREAKER
FOURTH LINE: POWER SOURCE (IDENTIFY BOTH SOURCES FOR EQUIPMENT SERVED FROM MULTIPLE SOURCES)

XXXX = BASED ON FINAL DESIGN SHOP DRAWING

GENERAL NOTES:

PROVIDE IDENTIFICATION PLATES FOR ALL DISTRIBUTION EQUIPMENT INCLUDING BUT NOT LIMITED TO TRANSFORMERS, DISTRIBUTION/BRANCH PANELS, TRANSFER SWITCHES, MCC INDIVIDUAL MCC BUCKETS AND DISCONNECT SWITCHES.

DETAIL NOTES

1. BEVELED EDGES.
2. 003mm HOLE FOR SST SCREW, (2 PLACES).

10 EQUIPMENT NAMEPLATE REQUIREMENTS
NTS

NO.	DATE	DR	CHK	REVISION	BY	APVD

DSGN C ROBERTSON | DR C ROBERTSON | CHK J MOORMAN | APVD C ROBERTSON

VILLAGE OF NEWTONSVILLE
WASTEWATER TREATMENT PLANT & COLLECTION SYSTEM - PART A
CLERMONT COUNTY WATER RESOURCES DEPARTMENT, CLERMONT COUNTY, OHIO

ELECTRICAL

TYPICAL DETAILS 2

NTS
VERIFY SCALE
BAR IS ONE INCH ON ORIGINAL DRAWING. 0 1"

DATE	2017-03-31
PROJ	652379
DWG	E-011
SHEET	63 of 91

REUSE OF DOCUMENTS: THIS DOCUMENT, AND THE IDEAS AND DESIGNS INCORPORATED HEREIN, AS AN INSTRUMENT OF PROFESSIONAL SERVICE, IS THE PROPERTY OF CH2M HILL AND IS NOT TO BE USED, IN WHOLE OR IN PART, FOR ANY OTHER PROJECT WITHOUT THE WRITTEN AUTHORIZATION OF CH2M HILL.
©CH2M HILL 2015. ALL RIGHTS RESERVED.

INSTRUMENT IDENTIFICATION

EXAMPLE SYMBOLS

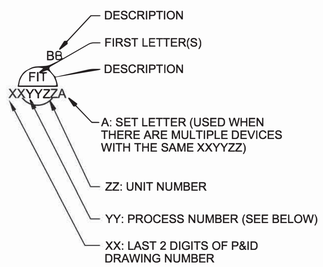

PROCESS NUMBERS

01: RAW SEWAGE PUMP STATION
02: SCREENING
03: SEQUENCING BATCH REACTOR
04: TERTIARY FILTER
05: DISINFECTION
06: POST AERATION
07: BLOWERS
08: CHEMICAL METERING
09: SLUDGE HANDLING
10: POWER MONITORING
11: MISCELLANEOUS

DIGITAL SYSTEM INTERFACES

▲ ANALOG INPUT (SEE GENERAL NOTE 4)

▼ ANALOG OUTPUT (SEE GENERAL NOTE 4)

△ DISCRETE INPUT

▽ DISCRETE OUTPUT

INTERNATIONAL SOCIETY OF AUTOMATION

INSTRUMENT IDENTIFICATION LETTERS TABLE

LETTER	FIRST-LETTER		SUCCEEDING-LETTERS		
	PROCESS OR INITIATING VARIABLE	MODIFIER	READOUT OR PASSIVE FUNCTION	READOUT OR PASSIVE FUNCTION	READOUT OR PASSIVE FUNCTION
A	ANALYSIS (+)		ALARM		
B	BURNER, COMBUSTION		CLOSE	STOP	DECREASE
C	USER'S CHOICE (*)			CONTROL	
D	DENSITY (S.G.)	DIFFERENTIAL	OPEN	START	INCREASE
E	VOLTAGE		PRIMARY ELEMENT, SENSOR		
F	FLOW RATE	RATIO (FRACTION)	FAIL	FORWARD	
G	USER'S CHOICE (*)		GLASS, GAUGE VIEWING DEVICE	GATE	
H	HAND (MANUAL)			OPEN	HIGH
I	CURRENT (ELECTRICAL)		INDICATE		
J	POWER	SCAN			
K	TIME, TIME SCHEDULE	TIME RATE OF CHANGE		CONTROL STATION	
L	LEVEL		LIGHT (PILOT)	CLOSED	LOW
M	MOTOR	MOTION	MOMENTARY		MIDDLE, INTERMEDIATE
N	TORQUE		RUNNING	IN SERVICE	REMOTE/AUTO
O	USER'S CHOICE (*)		ORIFICE, RESTRICTION	OVERLOAD	
P	PRESSURE, VACUUM		POINT (TEST) CONNECTION	PUMP	
Q	QUANTITY	INTEGRATE, TOTALIZE			
R	RADIATION		RECORD OR PRINT	REVERSE	
S	SPEED, FREQUENCY	SAFETY		SWITCH	
T	TEMPERATURE			TRANSMIT	
U	MULTI VARIABLE		MULTI FUNCTION	MULTI FUNCTION	MULTI FUNCTION
V	VIBRATION, MECHANICAL ANALYSIS			VALVE, DAMPER, LOUVER	
W	WEIGHT, FORCE		WELL		
X	UNCLASSIFIED (*)	X AXIS	UNCLASSIFIED (*)	UNCLASSIFIED (*)	UNCLASSIFIED (*)
Y	EVENT, STATE OR PRESENCE	Y AXIS		RELAY, COMPUTE, CONVERT	
Z	POSITION	Z AXIS		DRIVE, ACTUATOR, UNCLASSIFIED FINAL CONTROL ELEMENT	

TABLE BASED ON THE INSTRUMENTATION, SYSTEMS, AND AUTOMATION SOCIETY (ISA) STANDARD WITH MODIFICATIONS PER MSD STANDARDS.

(*) OR (+) WHEN USED, EXPLANATION IS SHOWN ADJACENT TO INSTRUMENT SYMBOL. SEE ABBREVIATIONS AND LETTER SYMBOLS.

GENERAL INSTRUMENT OR FUNCTIONAL SYMBOLS

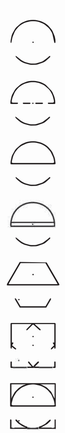

FIELD MOUNTED

REAR-OF-PANEL MOUNTED (OPERATOR INACCESSIBLE)

PANEL MOUNTED (OPERATOR ACCESSIBLE)

MCC MOUNTED

COMPUTER FUNCTION

PLC FUNCTION

SHARED DISPLAY, SHARED CONTROL

INST PNL

TRANSDUCERS

A	ANALOG	I	CURRENT
D	DIGITAL	P	PNEUMATIC
E	VOLTAGE	PF	PULSE FREQUENCY
F	FREQUENCY	PD	PULSE DURATION
H	HYDRAULIC	R	RESISTANCE

EXAMPLE

CURRENT TO PNEUMATIC TRANSDUCER (BACK OF PANEL, IN A FLOW LOOP)

ACCESSORY DEVICES

A	ALARM
C	CONTROLLER
I	INDICATOR
R	RECORDER
S	SWITCH
T	TRANSMITTER
X	UNCLASSIFIED

EXAMPLE

TRANSMITTER AS AN ACCESSORY TO A FLOW ELEMENT

PILOT LIGHT SYMBOLS

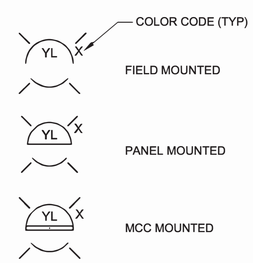

COLOR CODE:

G = GREEN
W = WHITE
A = AMBER
R = RED

LINE LEGEND

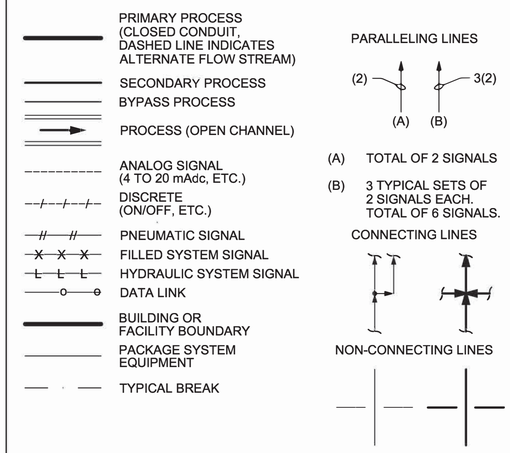

INTERFACE SYMBOLS

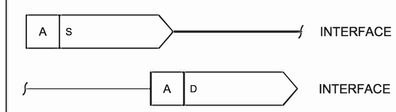

A INTERFACE NO. (2 DIGITS)

D DESTINATION DRAWING NO.

S SOURCE DRAWING NO.

ABBREVIATIONS & LETTER SYMBOLS

AC	ALTERNATING CURRENT
AM	AUTO-MANUAL
AFD	ADJUSTABLE FREQUENCY DRIVE
CB	CIRCUIT BREAKER
CMD	COMMAND
DC	DIRECT CURRENT
DISC	DISCONNECT
E-STOP	EMERGENCY STOP
FOR	FOWARD-OFF-REVERSE
H_2S	HYDROGEN SULFIDE
HOA	HAND-OFF-AUTO
HOR	HAND-OFF-REMOTE
ISB	INTRINSICALLY SAFE BARRIER
ISR	INTRINSICALLY SAFE RELAY
LCS	LOCAL CONTROL STATION
LEL	LOWER EXPLOSIVE LIMIT
LOR	LOCAL-OFF-REMOTE
LSSP	LOCAL SELECTOR SWITCH PANEL
OCA	OPEN-CLOSE-AUTO
OIT	OPERATOR INTERFACE TERMINAL
OCR	OPEN-STOP-CLOSE
pH	HYDROGEN ION CONCENTRATION
PLC	PROGRAMMABLE LOGIC CONTROLLER
POT	POTENTIOMETER
VAC	VOLTAGE - ALTERNATING CURRENT

GENERAL NOTES

1. COMPONENTS AND PANELS SHOWN WITH A SINGLE ASTERISK (✳) ARE TO BE PROVIDED AS PART OF A PACKAGE SYSTEM.
2. COMPONENTS AND PANELS SHOWN WITH A DOUBLE ASTERISK (✳✳) ARE TO BE PROVIDED UNDER DIVISION 16, ELECTRICAL.
3. THIS IS A STANDARD LEGEND. THEREFORE, NOT ALL OF THIS INFORMATION MAY BE USED ON THE PROJECT.
4. AN I/I ISOLATOR SHALL BE PROVIDED FOR ALL ANALOG INPUT AND ANALOG OUTPUT SIGNALS.

STATE OF OHIO
Alan Lai
3/31/17
ALAN HWA CHIN LAI
E-67729
REGISTERED
PROFESSIONAL ENGINEER

NO.	DATE	REVISION	BY	APVD

DSGN	DR	CHK	APVD
A LAI	B EMORY	D FISHER	A LAI

©CH2M HILL 2015. ALL RIGHTS RESERVED.

REUSE OF DOCUMENTS: THIS DOCUMENT, AND THE IDEAS AND DESIGNS INCORPORATED HEREIN, AS AN INSTRUMENT OF PROFESSIONAL SERVICE, IS THE PROPERTY OF CH2M HILL AND IS NOT TO BE USED, IN WHOLE OR IN PART, FOR ANY OTHER PROJECT WITHOUT THE WRITTEN AUTHORIZATION OF CH2M HILL.

VILLAGE OF NEWTONSVILLE
WASTEWATER TREATMENT PLANT & COLLECTION SYSTEM - PART A
CLERMONT COUNTY WATER RESOURCES DEPARTMENT, CLERMONT COUNTY, OHIO

INSTRUMENTATION

INSTRUMENTATION AND CONTROL LEGEND

NTS

VERIFY SCALE

BAR IS ONE INCH ON ORIGINAL DRAWING.
0 1"

DATE	2017-03-31
PROJ	652379
DWG	IC-001
SHEET	64 of 91

BID READY

VALVE SYMBOLS

- GATE
- KNIFE GATE
- BUTTERFLY
- GLOBE
- BALL
- VEE-BALL
- PLUG
- SEAT PORT ECCENTRIC PLUG
- DIAPHRAGM
- PINCH
- NEEDLE
- SWING CHECK
- BALL CHECK
- BACKFLOW PREVENTER
- ROTARY
- TELESCOPE
- SAMPLE
- MUD
- PRESSURE RELIEF
- AIR AND/OR VACUUM RELEASE
- REGULATED SIDE PRESSURE CONTROL
- PRESSURE REGULATION (CLAY-TYPE)
- MULTI-PORT VALVE (GATE VALVE SHOWN. FOR OTHER VALVE TYPES, APPROPRIATE VALVE SYMBOL SHOWN.) SEAT PORTS ARE IMPLIED BY INDICATED FLOW PATTERN.
- ANGLE GATE

GATE SYMBOLS

- SLUICE
- BUTTERFLY
- FABRICATED SLIDE
- FLAP
- STOP LOG
- SHEAR

ACTUATOR SYMBOLS

- PNEUMATIC DIAPHRAGM SPRING-OPPOSED, SINGLE OR DOUBLE ACTING
- PNEUMATIC CYLINDER SINGLE OR DOUBLE ACTING ACTUATED BY ONE INPUT
- ELECTRIC MOTOR
- SOLENOID
- VALVE POSITIONER
- HYDRAULIC
- DIAPHRAGM, DIFFERENTIAL PRESSURE
- ELECTROHYDRAULIC
- MANUAL

NOTE:
ON LOSS OF PRIMARY POWER (PNEUMATIC, ELECTRICAL, OR HYDRAULIC)

XX:
- FO FAIL OPEN
- FC FAIL CLOSED
- FLP FAIL TO LAST POSITION

PRIMARY ELEMENT SYMBOLS

- PARSHALL FLUME
- WEIR
- ORFICE PLATE
- FLOW TUBE
- PITOT-STATIC
- VORTEX METER
- ULTRASONIC FLOWMETER
- ELECTROMAGNETIC FLOWMETER
- PROPELLER OR TURBINE METER
- THERMAL FLOWMETER
- LEVEL (BUBBLER TUBE)
- LS LEVEL (FLOAT)
- FI ROTAMETER
- DE DENSITY METER
- XX GENERIC
- LE LEVEL

MISCELLANEOUS SYMBOLS

- VENT TO ATMOSPHERE
- AIR GAP
- DRIP TRAP
- PIG INSERT POINT
- PIG CATCH POINT
- SELF CONTAINED AIR SUPPLY
- AIR PURGE SET
- FLUSHING CONNECTION
- SEAL WATER SET
- WATER PURGE SET
- FLEXIBLE CONNECTION
- AERATOR
- DIAPHRAGM SEAL
- ANNULAR DIAPHRAGM SEAL
- COMPOSITE SAMPLER
- FLAME TRAP
- CALIBRATION COLUMN
- INLINE SILENCER
- BLIND FLANGE
- PIPE CAP
- STRAINER
- BASKET STRAINER
- FILTER
- PULSATION DAMPENER
- EXPANSION CHAMBER
- FFLCPLLLX — PANEL CONTINUED ON SAME OR OTHER DRAWING; PANEL OUTLINE; PANEL NAME
- 120V — 120 VOLT, 60 HZ POWER
- 480V — 480 VOLT, 60 HZ POWER
- XX — AIR SET XX = SUPPLY PRESSURE IN PSIG.
- PLUG
- RECEPTACLE
- RUPTURE DISK (VACUUM)
- RUPTURE DISK (PRESSURE)
- TV MONITOR
- TV CAMERA
- AND — LOGIC ELEMENT: IF A AND NOT B THEN C
- OR — LOGIC ELEMENT: IF A OR B THEN C
- RADIO ANTENNA
- OR — INTERLOCK, SEE CONTROL DIAGRAMS
- VOICE COMMUNICATION POINT
- SKIMMING MECHANISM
- SCREW CONVEYOR
- MIXER
- ELECTRIC MOTOR

PUMP AND COMPRESSOR SYMBOLS

- CENTRIFUGAL PUMP (DRY PIT)
- CENTRIFUGAL WET PIT PUMP OR TURBINE PUMP
- RECIPROCATING OR METERING PUMP (POSITIVE DISPLACEMENT)
- DIAPHRAGM PUMP
- GEAR PUMP OR BLOWER (POSITIVE DISPLACEMENT)
- PROGESSING CAVITY PUMP
- COMPRESSOR (CENTRIFUGAL)
- COMPRESSOR (PISTON)
- BLOWER OR FAN (CENTRIFUGAL)
- EJECTOR
- PISTON PUMP
- SUBMERSIBLE SUMP PUMP
- ROTARY PUMP
- VACUUM PUMP
- SCREW PUMP

XX:
- AS ADJUSTABLE SPEED
- CS-1 CONSTANT SPEED (SINGLE SPEED)
- CS-2 CONSTANT SPEED (TWO SPEED)

LINE SIZE AND MATERIAL IDENTIFICATION

(FOR REFERENCE ONLY. SEE SITE AND MECHANICAL DRAWINGS)

18CLDI — PIPE DIAMETER IN INCHES; PIPE MATERIAL ABBREVIATION

CISP	CAST IRON SOIL PIPE
CLDI	CEMENT LINED DUCTILE IRON
CLSTL	CEMENT LINED STEEL
CU	COPPER
FRP	FIBERGLASS REINFORCED PLASTIC
PVC	POLYVINYL CHLORIDE
SST	STAINLESS STEEL
STL	STEEL

FLOW STREAM IDENTIFICATION

AHP	AIR, HIGH PRESSURE PROCESS
AI	AIR, INSTRUMENT
AL	ALUM
ALP	AIR, LOW PRESSURE PROCESS
ASH	SODA ASH
B	BRINE
BDS	BLENDED DIGESTED SLUDGE
BFE	BIO-FILTER EFFLUENT
BFI	BIO-FILTER INFLUENT
BFR	BIO-FILTER RECYCLE
BFW	BRINE FEEDWATER
BS	BRINE SLUDGE
BWS	BACKWASH SUPPLY
BYP	BYPASS
C	CARBON SLURRY
CD	CARBON DIOXIDE GAS
CG	CHLORINE GAS (PRESSURE)
CGV	CHLORINE GAS (VACUUM)
CHS	CHEMICAL SLUDGE
CL	CHLORINE LIQUID
CO	CONDENSATE DRAIN
CS	CHLORINE SOLUTION
CWR	COOLING WATER RETURN
CWS	COOLING WATER SUPPLY
D	DRAIN (SANITARY)
DAS	DIGESTED ACTIVATED SLUDGE
DG	DIGESTER GAS
DIW	DEIONIZED WATER
DS	DIGESTED SLUDGE
DW	DISTILLED WATER
F	FILTRATE
FC	FERRIC CHLORINE
FE	FILTER EFFLUENT
FI	FILTER INFLUENT
FOR	FUEL OIL RETURN
FOS	FUEL OIL SUPPLY
FTW	FILTER TO WASTE
G	NATURAL GAS
GAS	GASOLINE
GR	GRIT SLURRY
H	HYDROGEN GAS
HPR	HIGH PRESSURE RETURN (CONDENSATE)
HPS	HIGH PRESSURE STEAM
HS	HEAVY SOLIDS
HWR	HEATING WATER RETURN
HWS	HEATING WATER SUPPLY
LD	DRY LIME
LPO	LIQUID POLYMER
LPR	LOW PRESSURE RETURN (CONDENSATE)
LPS	LOW PRESSURE STEAM
LS	LIME SLURRY
LSD	LIME SLUDGE
ML	MIXED LIQUOR
MPR	MEDIUM PRESSURE RETURN (CONDENSATE)
MPS	MEDIUM PRESSURE STEAM
NA	SODIUM HYDROXIDE
NT	NITROGEN TRICHLORIDE
OF	OVERFLOW
P	PROPANE GAS
PDS	PRIMARY DIGESTED SLUDGE
PE	PRIMARY EFFLUENT
PI	PRIMARY INFLUENT
PLE	PLANT EFFLUENT
PO	POLYMER SOLUTION
PS	PRESSURE SEWER
PSD	PRIMARY SLUDGE
PSM	PRIMARY SCUM
RAS	RETURN ACTIVATED SLUDGE
RB	RAW BRINE
RCS	RECARBONATION SLUDGE
RCY	RECYCLE
RHW	RECIRCULATED HOT WATER
RS	RAW SEWAGE
RSD	RECIRCULATED SLUDGE
S	SANITARY SEWER (GRAVITY)
SA	SAMPLE
SAS	SODA ASH SOLUTION
SB	SPENT BRINE
SC	COLD SLUDGE
SDG	SULFUR DIOXIDE GAS
SDL	SULFUR DIOXIDE LIQUID
SDS	SULFUR DIOXIDE SOLUTION
SDV	SULFUR DIOXIDE GAS (VACUUM)
SE	SECONDARY EFFLUENT
SH	HEATED SLUDGE
SSD	SECONDARY DIGESTED SLUDGE
SSM	SECONDARY SCUM
SW	SURFACE WASH
TAS	THICKENED ACTIVATED SLUDGE
TB	TREATED BRINE
TBS	THICKENER BOTTOM SLUDGE
TDS	THICKENED DIGESTED SLUDGE
TPS	THICKENED PRIMARY SLUDGE
TUF	THICKENER UNDERFLOW
UD	UNDERDRAIN
V	VENT
VAC	VACUUM
W1	NO. 1 (POTABLE) WATER
W2	NO. 2 (NON-POTABLE) WATER
W3	NO. 3 WATER
W4	NO. 4 WATER
WAS	WASTE ACTIVATED SLUDGE

STATE OF OHIO — ALAN HWA CHIN LAI E-67729 — REGISTERED PROFESSIONAL ENGINEER — 3/31/17

NO.	DATE	REVISION	DR	CHK	APVD	BY	APVD
DSGN		B EMORY	A LAI	D FISHER			A LAI

REUSE OF DOCUMENTS: THIS DOCUMENT, AND THE IDEAS AND DESIGNS INCORPORATED HEREIN, AS AN INSTRUMENT OF PROFESSIONAL SERVICE, IS THE PROPERTY OF CH2M HILL AND IS NOT TO BE USED, IN WHOLE OR IN PART, FOR ANY OTHER PROJECT WITHOUT THE WRITTEN AUTHORIZATION OF CH2M HILL.
©CH2M HILL 2015. ALL RIGHTS RESERVED.

Clermont County

VILLAGE OF NEWTONSVILLE
WASTEWATER TREATMENT PLANT & COLLECTION SYSTEM - PART A
CLERMONT COUNTY WATER RESOURCES DEPARTMENT, CLERMONT COUNTY, OHIO

ch2m

INSTRUMENTATION

INSTRUMENTATION AND CONTROL AND FLOWSTREAM IDENTIFICATION LEGEND

NTS

VERIFY SCALE

BAR IS ONE INCH ON ORIGINAL DRAWING. 0 — 1"

DATE	2017-03-31
PROJ	652379
DWG	IC-002
SHEET	65 of 91

BID READY

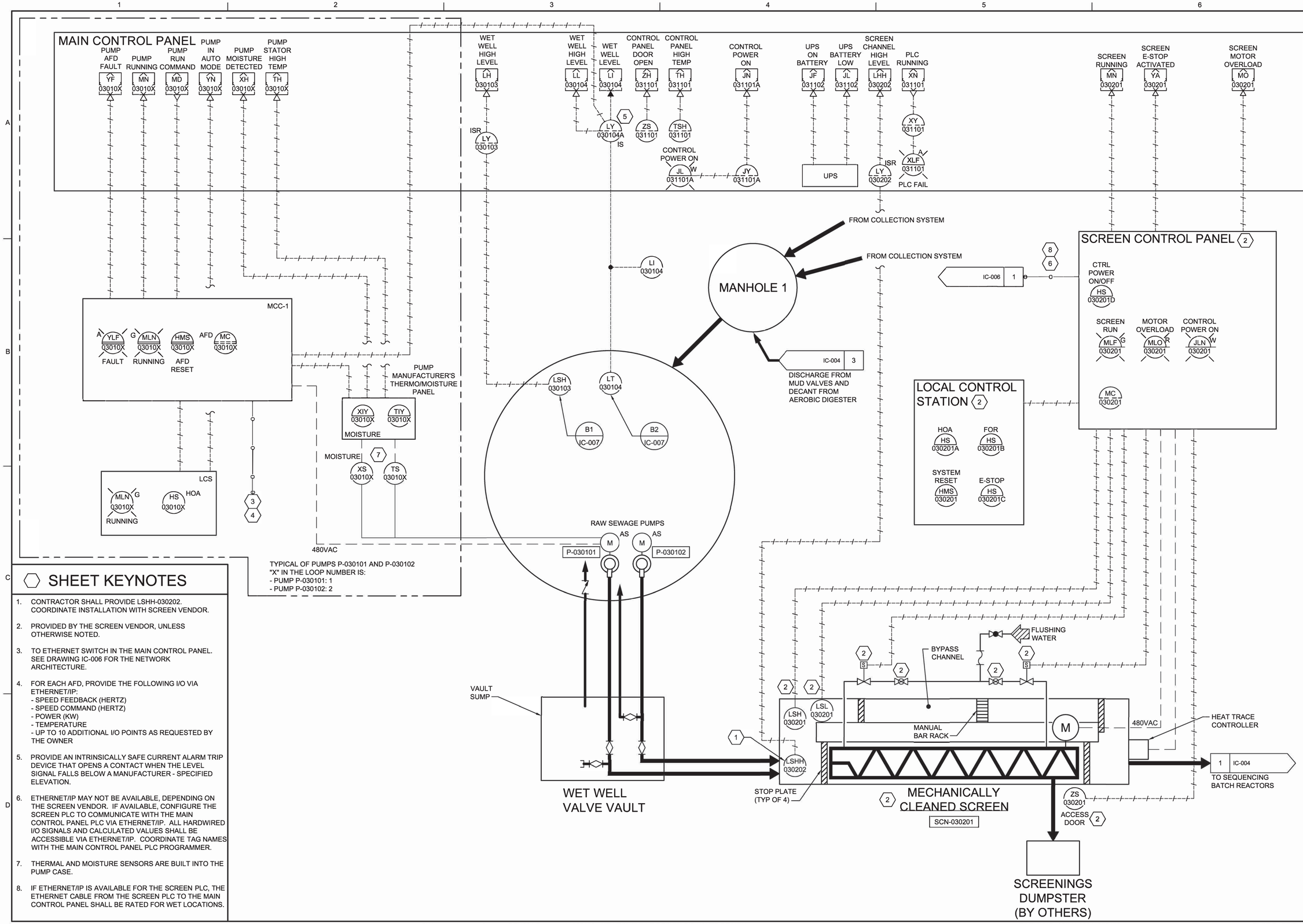

SHEET KEYNOTES

1. CONTRACTOR SHALL PROVIDE LSHH-030202. COORDINATE INSTALLATION WITH SCREEN VENDOR.
2. PROVIDED BY THE SCREEN VENDOR, UNLESS OTHERWISE NOTED.
3. TO ETHERNET SWITCH IN THE MAIN CONTROL PANEL. SEE DRAWING IC-006 FOR THE NETWORK ARCHITECTURE.
4. FOR EACH AFD, PROVIDE THE FOLLOWING I/O VIA ETHERNET/IP:
   - SPEED FEEDBACK (HERTZ)
   - SPEED COMMAND (HERTZ)
   - POWER (KW)
   - TEMPERATURE
   - UP TO 10 ADDITIONAL I/O POINTS AS REQUESTED BY THE OWNER
5. PROVIDE AN INTRINSICALLY SAFE CURRENT ALARM TRIP DEVICE THAT OPENS A CONTACT WHEN THE LEVEL SIGNAL FALLS BELOW A MANUFACTURER - SPECIFIED ELEVATION.
6. ETHERNET/IP MAY NOT BE AVAILABLE, DEPENDING ON THE SCREEN VENDOR. IF AVAILABLE, CONFIGURE THE SCREEN PLC TO COMMUNICATE WITH THE MAIN CONTROL PANEL PLC VIA ETHERNET/IP. ALL HARDWIRED I/O SIGNALS AND CALCULATED VALUES SHALL BE ACCESSIBLE VIA ETHERNET/IP. COORDINATE TAG NAMES WITH THE MAIN CONTROL PANEL PLC PROGRAMMER.
7. THERMAL AND MOISTURE SENSORS ARE BUILT INTO THE PUMP CASE.
8. IF ETHERNET/IP IS AVAILABLE FOR THE SCREEN PLC, THE ETHERNET CABLE FROM THE SCREEN PLC TO THE MAIN CONTROL PANEL SHALL BE RATED FOR WET LOCATIONS.

STATE OF OHIO
ALAN HWA CHIN LAI
E-67729
3/31/17
REGISTERED PROFESSIONAL ENGINEER

NO.	DATE	REVISION	BY	APVD
DSGN	A LAI	DR	CHK	APVD
		B EMORY	D FISHER	A LAI

THIS DOCUMENT, AND THE IDEAS AND DESIGNS INCORPORATED HEREIN, AS AN INSTRUMENT OF PROFESSIONAL SERVICE, IS THE PROPERTY OF CH2M HILL AND IS NOT TO BE USED, IN WHOLE OR IN PART, FOR ANY OTHER PROJECT WITHOUT THE WRITTEN AUTHORIZATION OF CH2M HILL.
REUSE OF DOCUMENTS:
©CH2M HILL 2015. ALL RIGHTS RESERVED.

Clermont County

VILLAGE OF NEWTONSVILLE
WASTEWATER TREATMENT PLANT & COLLECTION SYSTEM - PART A
CLERMONT COUNTY WATER RESOURCES DEPARTMENT, CLERMONT COUNTY, OHIO

ch2m

INSTRUMENTATION
RAW SEWAGE PUMP STATION AND SCREENING P&ID

NTS
VERIFY SCALE
BAR IS ONE INCH ON ORIGINAL DRAWING.
0 1"

DATE	2017-03-31
PROJ	652379
DWG	IC-003
SHEET	66 of 91

BID READY

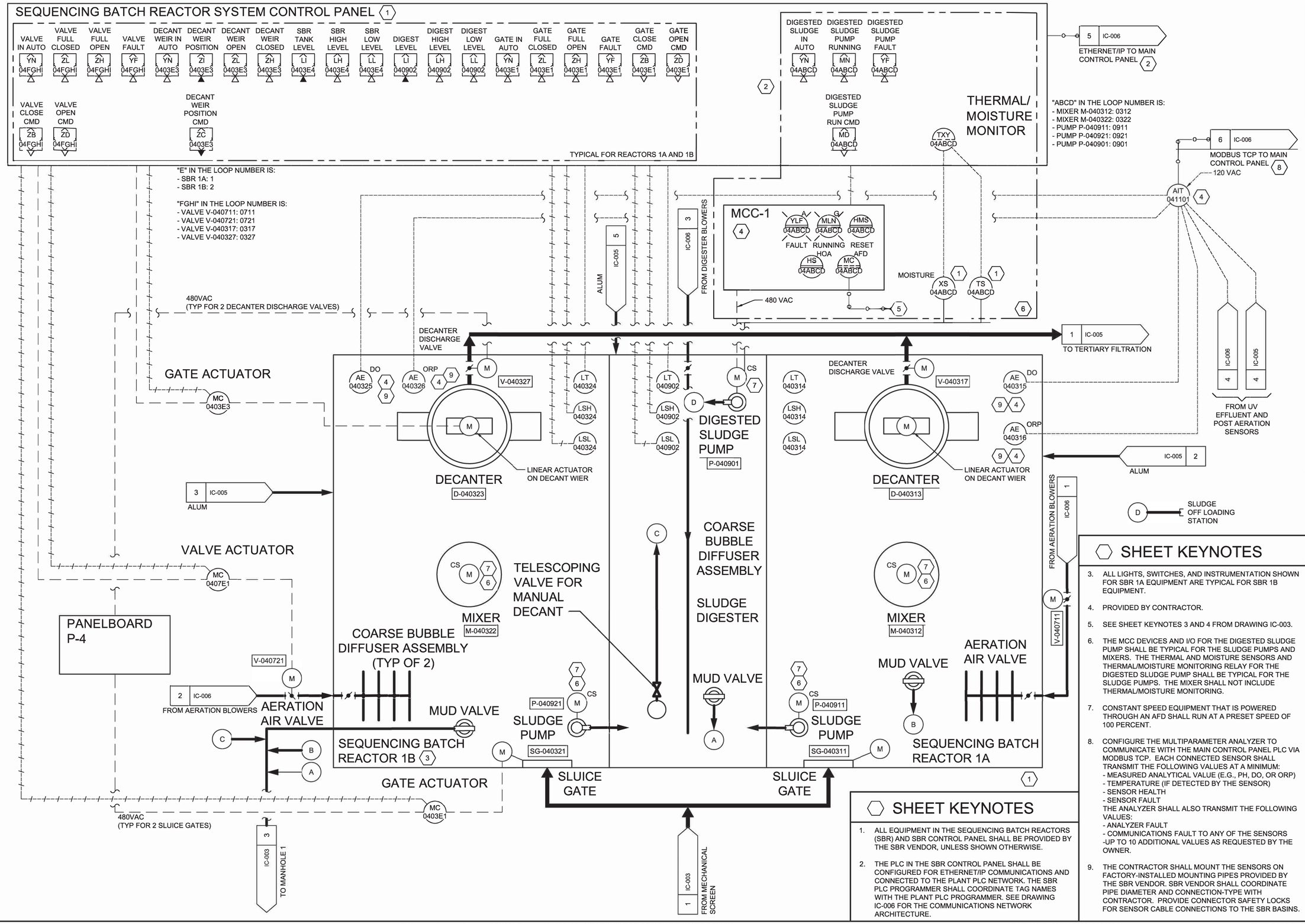

SHEET KEYNOTES

1. ALL EQUIPMENT IN THE SEQUENCING BATCH REACTORS (SBR) AND SBR CONTROL PANEL SHALL BE PROVIDED BY THE SBR VENDOR, UNLESS SHOWN OTHERWISE.
2. THE PLC IN THE SBR CONTROL PANEL SHALL BE CONFIGURED FOR ETHERNET/IP COMMUNICATIONS AND CONNECTED TO THE PLANT PLC NETWORK. THE SBR PLC PROGRAMMER SHALL COORDINATE TAG NAMES WITH THE PLANT PLC PROGRAMMER. SEE DRAWING IC-006 FOR THE COMMUNICATIONS NETWORK ARCHITECTURE.

SHEET KEYNOTES

3. ALL LIGHTS, SWITCHES, AND INSTRUMENTATION SHOWN FOR SBR 1A EQUIPMENT ARE TYPICAL FOR SBR 1B EQUIPMENT.
4. PROVIDED BY CONTRACTOR.
5. SEE SHEET KEYNOTES 3 AND 4 FROM DRAWING IC-003.
6. THE MCC DEVICES AND I/O FOR THE DIGESTED SLUDGE PUMP SHALL BE TYPICAL FOR THE SLUDGE PUMPS AND MIXERS. THE THERMAL AND MOISTURE SENSORS AND THERMAL/MOISTURE MONITORING RELAY FOR THE DIGESTED SLUDGE PUMP SHALL BE TYPICAL FOR THE SLUDGE PUMPS. THE MIXER SHALL NOT INCLUDE THERMAL/MOISTURE MONITORING.
7. CONSTANT SPEED EQUIPMENT THAT IS POWERED THROUGH AN AFD SHALL RUN AT A PRESET SPEED OF 100 PERCENT.
8. CONFIGURE THE MULTIPARAMETER ANALYZER TO COMMUNICATE WITH THE MAIN CONTROL PANEL PLC VIA MODBUS TCP. EACH CONNECTED SENSOR SHALL TRANSMIT THE FOLLOWING VALUES AT A MINIMUM:
   - MEASURED ANALYTICAL VALUE (E.G., PH, DO, OR ORP)
   - TEMPERATURE (IF DETECTED BY THE SENSOR)
   - SENSOR HEALTH
   - SENSOR FAULT

   THE ANALYZER SHALL ALSO TRANSMIT THE FOLLOWING VALUES:
   - ANALYZER FAULT
   - COMMUNICATIONS FAULT TO ANY OF THE SENSORS
   -UP TO 10 ADDITIONAL VALUES AS REQUESTED BY THE OWNER.
9. THE CONTRACTOR SHALL MOUNT THE SENSORS ON FACTORY-INSTALLED MOUNTING PIPES PROVIDED BY THE SBR VENDOR. SBR VENDOR SHALL COORDINATE PIPE DIAMETER AND CONNECTION-TYPE WITH CONTRACTOR. PROVIDE CONNECTOR SAFETY LOCKS FOR SENSOR CABLE CONNECTIONS TO THE SBR BASINS.

STATE OF OHIO ALAN HWA CHIN LAI E-67729 REGISTERED PROFESSIONAL ENGINEER 3/31/17

NO.	DATE	REVISION	BY	APVD
DSGN	A LAI	DR	B EMORY	CHK D FISHER	A LAI	APVD

REUSE OF DOCUMENTS: THIS DOCUMENT, AND THE IDEAS AND DESIGNS INCORPORATED HEREIN, AS AN INSTRUMENT OF PROFESSIONAL SERVICE, IS THE PROPERTY OF CH2M HILL AND IS NOT TO BE USED, IN WHOLE OR IN PART, FOR ANY OTHER PROJECT WITHOUT THE WRITTEN AUTHORIZATION OF CH2M HILL.
©CH2M HILL 2015. ALL RIGHTS RESERVED.

VILLAGE OF NEWTONSVILLE
WASTEWATER TREATMENT PLANT & COLLECTION SYSTEM - PART A
CLERMONT COUNTY WATER RESOURCES DEPARTMENT, CLERMONT COUNTY, OHIO

INSTRUMENTATION
SEQUENCING BATCH REACTORS P&ID

NTS
VERIFY SCALE
BAR IS ONE INCH ON ORIGINAL DRAWING.
0 1"

DATE	2017-03-31
PROJ	652379
DWG	IC-004
SHEET	67 of 91

BID READY

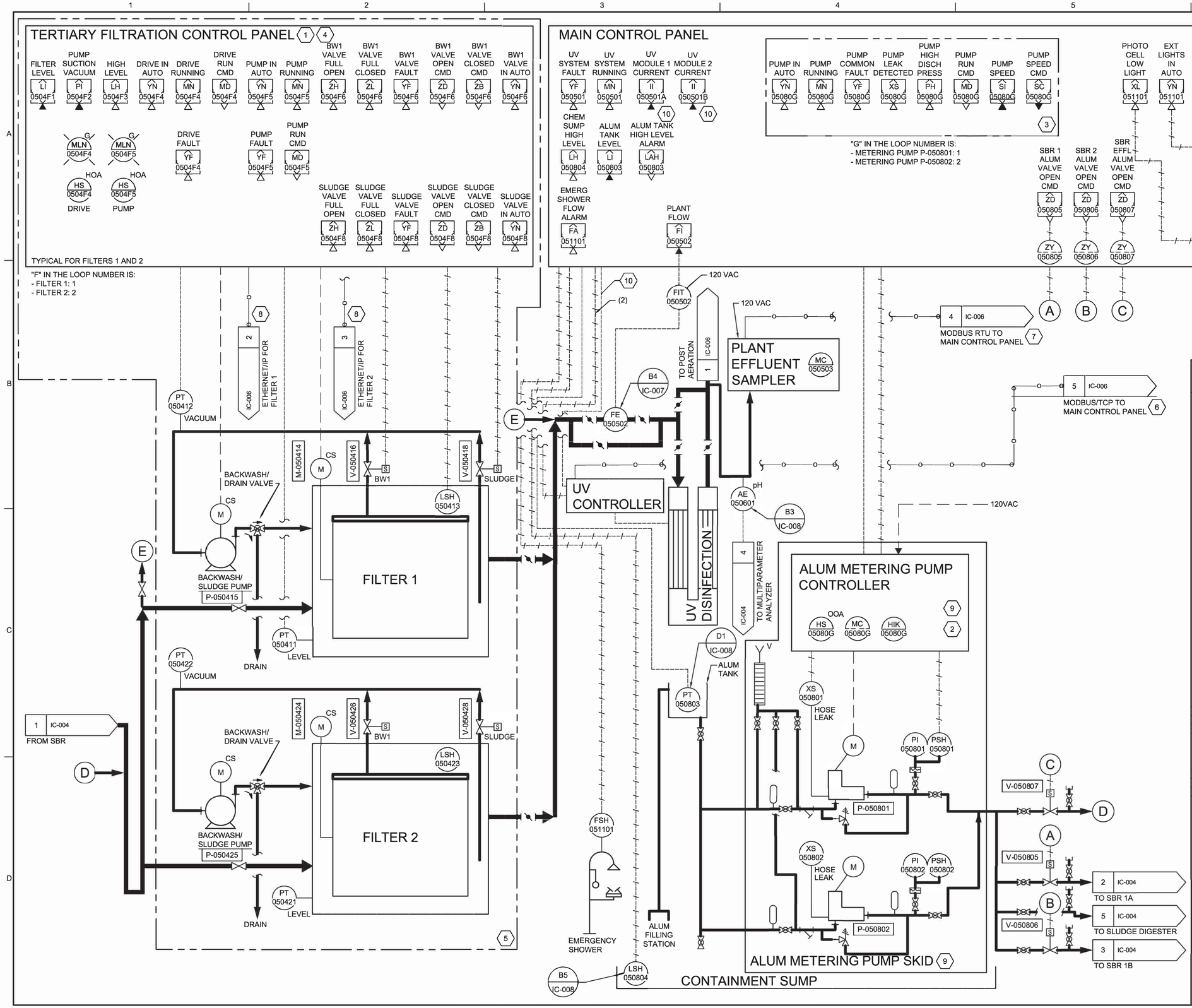

SHEET KEYNOTES

1. ALL EQUIPMENT, INSTRUMENTATION, AND CONTROLS SHOWN FOR FILTER 1 ARE TYPICAL FOR FILTER 2.
2. CONTROLLER AND I/O ARE TYPICAL FOR ALL METERING PUMPS.
3. I/O ARE TYPICAL FOR ALL METERING PUMPS.
4. THE PLC IN THE TERTIARY FILTRATION CONTROL PANEL SHALL BE CONFIGURED FOR ETHERNET/IP COMMUNICATIONS AND CONNECTED TO THE PLANT PLC NETWORK. THE FILTRATION PLC PROGRAMMER SHALL COORDINATE TAG NAMES WITH THE PLANT PLC PROGRAMMER. SEE DRAWING IC-006 FOR THE COMMUNICATIONS NETWORK ARCHITECTURE.
5. ALL EQUIPMENT IN THE TERTIARY FILTERS AND TERTIARY FILTRATION CONTROL PANEL SHALL BE PROVIDED BY THE TERTIARY FILTRATION VENDOR, UNLESS SHOWN OTHERWISE.
6. MODBUS/TCP MAY NOT BE AVAILABLE, DEPENDING ON THE UV VENDOR. IF AVAILABLE, CONFIGURE THE UV CONTROLLER TO COMMUNICATE WITH THE MAIN CONTROL PANEL PLC VIA MODBUS/TCP. ALL HARDWIRED I/O SIGNALS AND CALCULATED VALUES SHALL BE ACCESSIBLE VIA MODBUS/TCP. COORDINATE TAG NAMES WITH THE PLANT PLC PROGRAMMER.
7. CONFIGURE THE AUTOMATIC SAMPLER TO COMMUNICATE WITH THE MAIN CONTROL PANEL PLC VIA MODBUS RTU. THE SAMPLER SHALL TRANSMIT THE FOLLOWING VALUES AT A MINIMUM:
   - SAMPLE TAKEN
   - SAMPLER FAULT
   - MODE OF OPERATION (E.G., FLOW-PACED)
   - UP TO 10 ADDITIONAL OUTPUT VALUES AS REQUESTED BY THE OWNER.
   - THE SAMPLER SHALL ALSO RECEIVE THE FOLLOWING VALUES:
   - TAKE A SAMPLE
   - PLANT FLOW
   - MODE OF OPERATION REQUEST
   - UP TO 10 ADDITIONAL VALUES AS REQUESTED BY THE OWNER.
8. CONFIGURE EACH FILTER CONTROL PANEL PLC TO COMMUNICATE WITH THE MAIN CONTROL PANEL PLC VIA ETHERNET/IP. ALL HARDWIRED I/O SIGNALS AND CALCULATED VALUES SHALL BE ACCESSIBLE VIA ETHERNET/IP. COORDINATE TAG NAMES WITH THE PLANT PLC PROGRAMMER.
9. ALL EQUIPMENT ON ALUM METERING PUMP SKID AND ALUM METERING PUMP SKID CONTROL PANEL SHALL BE PROVIDED BY THE METERING PUMP SKID VENDOR, UNLESS SHOWN OTHERWISE. EXACT SKID PIPE AND VALVE LAYOUT SHALL BE AS PER APPROVED SHOP DRAWINGS.
10. PROVIDE THE WIRING AND PLC PROGRAMMING FOR 2 FUTURE CURRENT TRANSDUCERS THAT WILL BE PROVIDED BY THE OWNER.

STATE OF OHIO ALAN HWA CHIN E-67729 REGISTERED PROFESSIONAL ENGINEER 3/31/17

NO.	DATE	REVISION	BY	APVD

DSGN A LAI | DR A LAI | CHK B EMORY | APVD D FISHER | BY A LAI

VILLAGE OF NEWTONSVILLE
WASTEWATER TREATMENT PLANT & COLLECTION SYSTEM - PART A
CLERMONT COUNTY WATER RESOURCES DEPARTMENT, CLERMONT COUNTY, OHIO

INSTRUMENTATION
TERTIARY FILTRATION, DISINFECTION, BLOWERS, AND CHEMICAL METERING PUMPS P&ID

NTS
VERIFY SCALE
BAR IS ONE INCH ON ORIGINAL DRAWING. 0 1"

DATE	2017-03-31
PROJ	652379
DWG	IC-005
SHEET	68 of 91

BID READY

REUSE OF DOCUMENTS: THIS DOCUMENT, AND THE IDEAS AND DESIGNS INCORPORATED HEREIN, AS AN INSTRUMENT OF PROFESSIONAL SERVICE, IS THE PROPERTY OF CH2M HILL AND IS NOT TO BE USED, IN WHOLE OR IN PART, FOR ANY OTHER PROJECT WITHOUT THE WRITTEN AUTHORIZATION OF CH2M HILL.
©CH2M HILL 2015. ALL RIGHTS RESERVED.

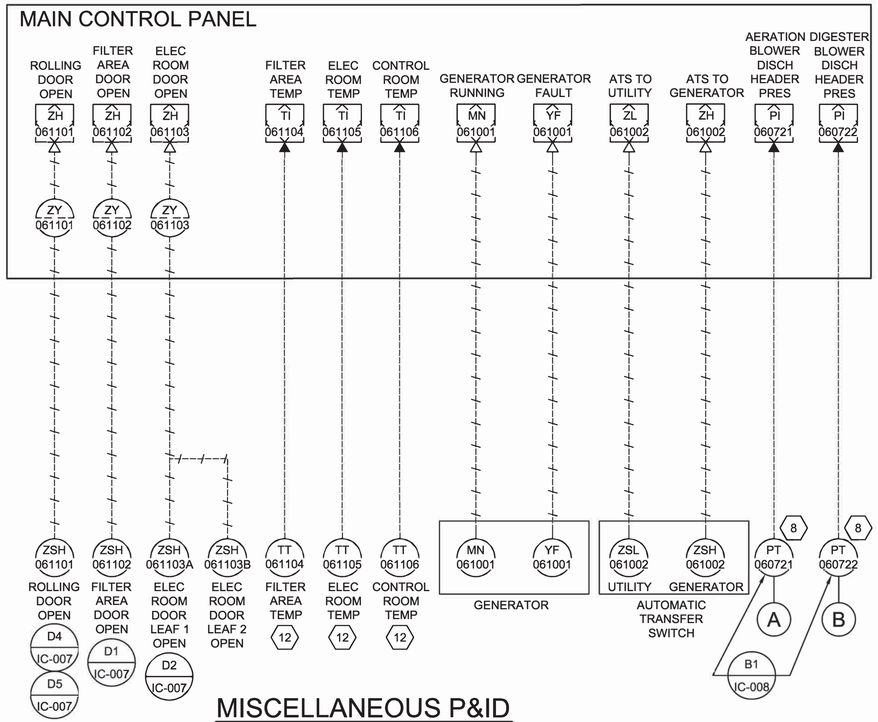

MISCELLANEOUS P&ID

NTS

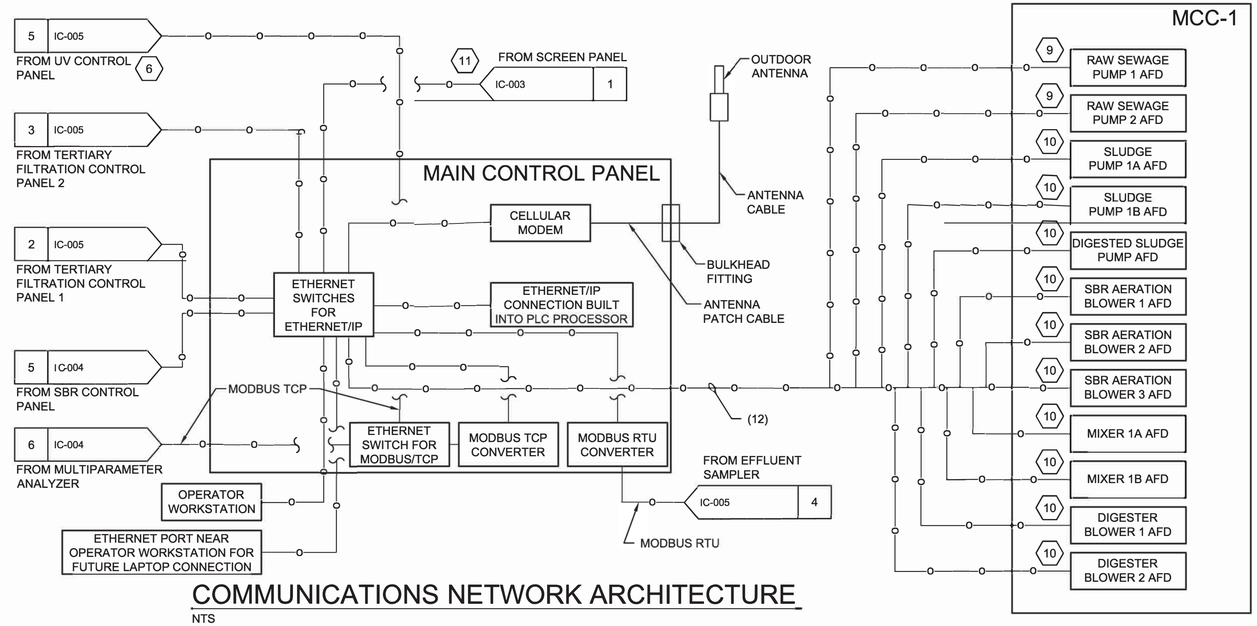

COMMUNICATIONS NETWORK ARCHITECTURE

NTS

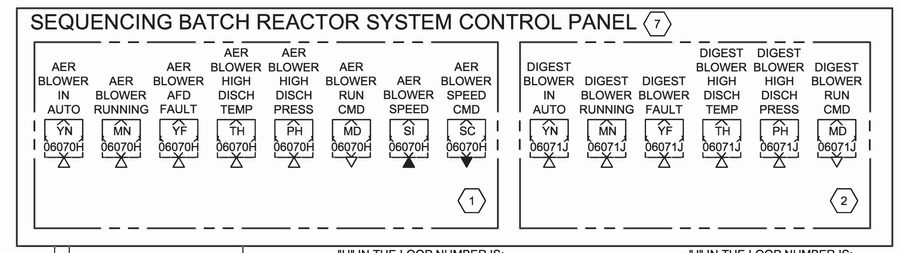

"H" IN THE LOOP NUMBER IS:
- AERATION BLOWER 1: 1
- AERATION BLOWER 2: 2
- AERATION BLOWER 3: 3

"J" IN THE LOOP NUMBER IS:
- DIGESTER BLOWER 1: 1
- DIGESTER BLOWER 2: 2

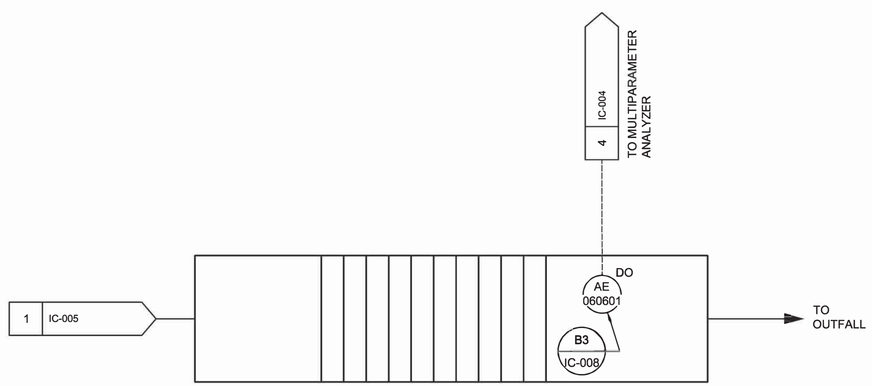

POST AERATION

NTS

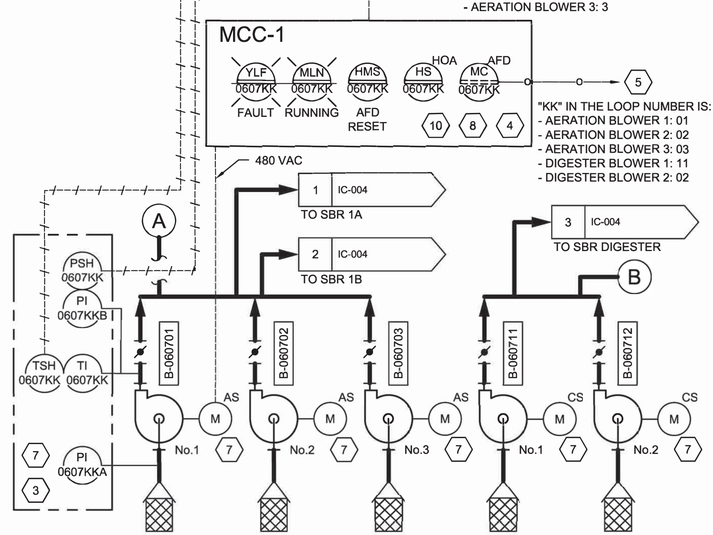

SHEET KEYNOTES

1. I/O ARE TYPICAL FOR ALL SBR AERATION BLOWERS.
2. I/O ARE TYPICAL FOR ALL DIGESTER BLOWERS.
3. INSTRUMENTATION IS TYPICAL FOR ALL BLOWERS.
4. MCC CONTROLS INCLUDING AFDS ARE TYPICAL FOR ALL BLOWERS. DIGESTER BLOWERS SHALL RUN AT A PRESET SPEED OF 100 PERCENT.
5. SEE SHEET KEYNOTES 3 AND 4 FROM DRAWING IC-003.
6. SEE SHEET KEYNOTE 6 FROM DRAWING IC-005.
7. BLOWER EQUIPMENT AND SBR CONTROL PANEL SHALL BE PROVIDED BY THE SBR VENDOR, UNLESS SHOWN OTHERWISE. BLOWER AIR PIPING SHALL BE PROVIDED BY THE CONTRACTOR.
8. PROVIDED BY THE CONTRACTOR.
9. SEE DRAWING IC-003, SHEET KEYNOTE 4 FOR ETHERNET/IP I/O.
10. PROVIDE THE FOLLOWING I/O VIA ETHERNET/IP TO THE MAIN PLC AS READ-ONLY:
    - SPEED FEEDBACK (HERTZ)
    - POWER (KW)
    - AFD TEMPERATURE
    - UP TO 10 ADDITIONAL I/O POINTS AS REQUESTED BY THE OWNER.
11. SEE SHEET KEYNOTE 6 FROM DRAWING IC-003.
12. AMBIENT TEMPERATURE SENSOR SHALL BE WALL-MOUNTED.

STATE OF OHIO ALAN HWA CHIN LAI E-67729 REGISTERED PROFESSIONAL ENGINEER 3/31/17

NO.	DATE	REVISION	CHK	APVD	BY	APVD
DSGN	A LAI	DR	B EMORY	D FISHER		A LAI

©CH2M HILL 2015. ALL RIGHTS RESERVED.

REUSE OF DOCUMENTS: THIS DOCUMENT, AND THE IDEAS AND DESIGNS INCORPORATED HEREIN, AS AN INSTRUMENT OF PROFESSIONAL SERVICE, IS THE PROPERTY OF CH2M HILL AND IS NOT TO BE USED, IN WHOLE OR IN PART, FOR ANY OTHER PROJECT WITHOUT THE WRITTEN AUTHORIZATION OF CH2M HILL.

VILLAGE OF NEWTONSVILLE
WASTEWATER TREATMENT PLANT & COLLECTION SYSTEM - PART A
CLERMONT COUNTY WATER RESOURCES DEPARTMENT, CLERMONT COUNTY, OHIO

ch2m

INSTRUMENTATION
MISC. P&ID AND COMMUNICATIONS NETWORK ARCHITECTURE

NTS
VERIFY SCALE
BAR IS ONE INCH ON ORIGINAL DRAWING.
0 1"

DATE	2017-03-31
PROJ	652379
DWG	IC-006
SHEET	69 of 91

BID READY

USE OWNER'S STANDARD DETAIL S5.1.4

B1 FLOAT SWITCH
NTS
IC-003

USE OWNER'S STANDARD DETAIL S5.1.4

B2 LEVEL TRANSMITTER
NTS
IC-003

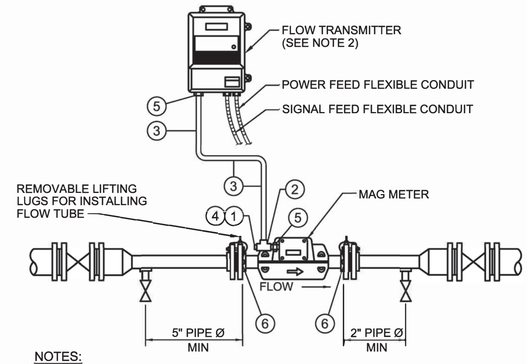

NOTES:

1. INSTALL MAG METER IN LINES WHERE THE FLOW IS FULL. IF INSTALLING IN VERTICAL LINES, ENSURE UPWARD FLOW.
2. MOUNT COMPONENT ON A STAND CONSTRUCTED OF ALUMINUM STRUT CHANNEL AND BRACED FOR SWAY.
3. PROVIDE GROUNDING RINGS AND INSTALL PER MANUFACTURER'S RECOMMENDATION.
4. CONSULT PROCESS DRAWINGS FOR PIPE MATERIALS.

ITEM	QTY	SIZE	DESCRIPTION
1	2	3/4"x 1/2"	REDUCING BUSHING
2	2	3/4"	CONDUIT TEE
3	AR	3/4"	FLEXIBLE CONDUIT
4	1	1/2"	UNIVERSAL DRAIN CH #ECD-21
5	1	3/4"	MEYER'S HUB
6	2	#6AWG	CONNECTOR WIRE
		—	

B4 FLOW METER - MAGNETIC
NTS
IC-005

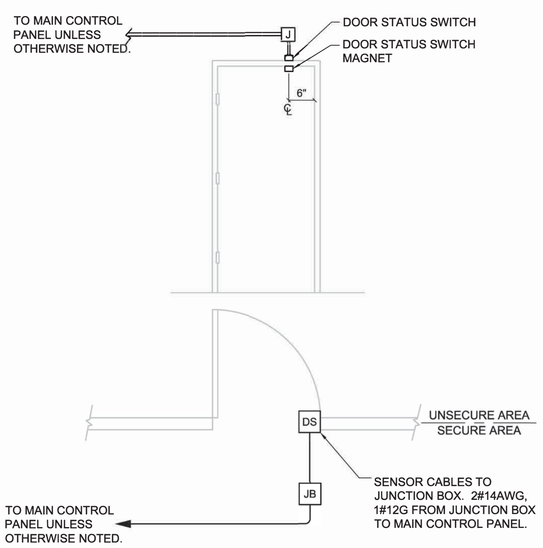

FUNCTIONALITY:
IN THE NORMAL STATE THE DOOR IS CLOSED. IF THE DOOR IS OPENED THEN AN ALARM IS GENERATED.

D1 MONITORED SINGLE DOOR
NTS
IC-006

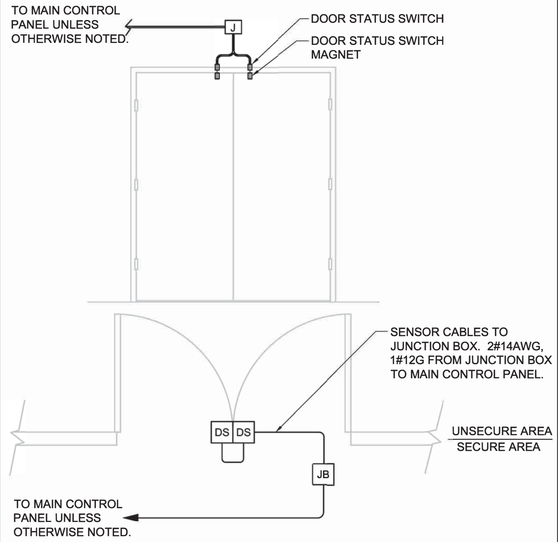

FUNCTIONALITY:
IN THE NORMAL STATE THE DOORS ARE CLOSED. IF EITHER DOOR IS OPENED THEN AN ALARM IS GENERATED.

D2 MONITORED DOUBLE DOOR
NTS
IC-006

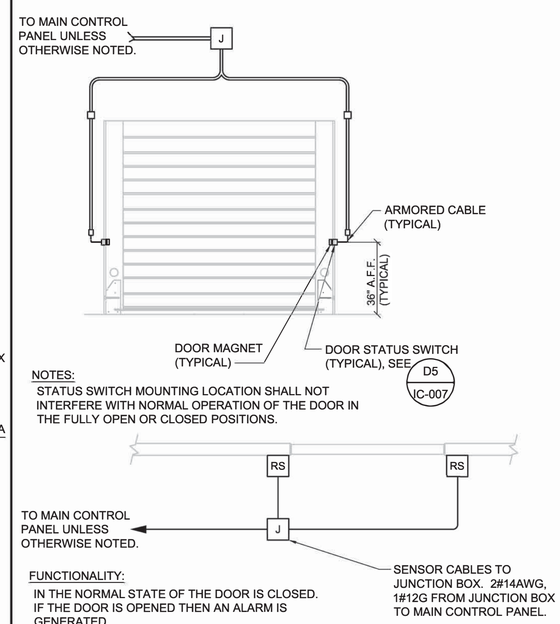

NOTES:
STATUS SWITCH MOUNTING LOCATION SHALL NOT INTERFERE WITH NORMAL OPERATION OF THE DOOR IN THE FULLY OPEN OR CLOSED POSITIONS.

FUNCTIONALITY:
IN THE NORMAL STATE OF THE DOOR IS CLOSED. IF THE DOOR IS OPENED THEN AN ALARM IS GENERATED.

D4 MONITORED ROLL-UP DOOR
NTS
IC-006

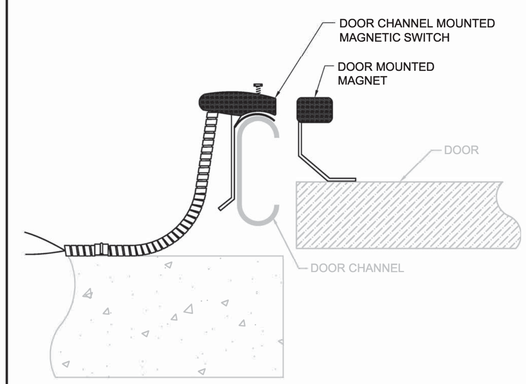

D5 ROLL-UP SWITCH MOUNTING
NTS
IC-006

STATE OF OHIO
ALAN HWA CHIN
LAI
E-67729
REGISTERED
PROFESSIONAL ENGINEER
3/31/17

NO.	DATE	REVISION	BY	APVD

DSGN A LAI | DR B EMORY | CHK D FISHER | APVD A LAI

VILLAGE OF NEWTONSVILLE
WASTEWATER TREATMENT PLANT & COLLECTION SYSTEM - PART A
CLERMONT COUNTY WATER RESOURCES DEPARTMENT, CLERMONT COUNTY, OHIO

INSTRUMENTATION
TYPICAL DETAILS 1

NTS
VERIFY SCALE
BAR IS ONE INCH ON ORIGINAL DRAWING.
0 1"

DATE	2017-03-31
PROJ	652379
DWG	IC-007
SHEET	70 of 91

BID READY

©CH2M HILL 2015. ALL RIGHTS RESERVED.
REUSE OF DOCUMENTS: THIS DOCUMENT, AND THE IDEAS AND DESIGNS INCORPORATED HEREIN, AS AN INSTRUMENT OF PROFESSIONAL SERVICE, IS THE PROPERTY OF CH2M HILL AND IS NOT TO BE USED, IN WHOLE OR IN PART, FOR ANY OTHER PROJECT WITHOUT THE WRITTEN AUTHORIZATION OF CH2M HILL.

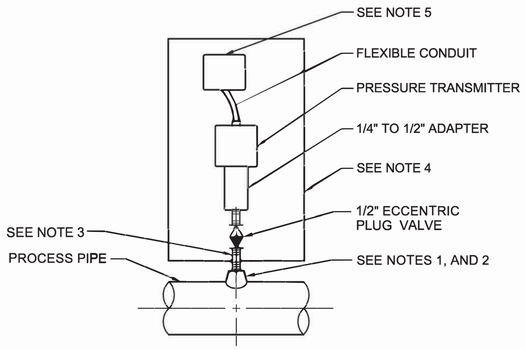

NOTES:

1. FOR PVC 2 1/2" AND SMALLER USE A BUSHING IN A TEE.
2. PROVIDE SNUBBER FOR POSITIVE DISPLACEMENT PUMP INSTALLATIONS.
3. PILOT PIPING SHALL BE 1/2" SCH 80 PVC.
4. MOUNT COMPONENTS ON A STAND CONSTRUCTED OF ALUMINUM STRUT CHANNEL AND BRACED FOR SWAY.
5. ALUMINUM JUNCTION BOX WITH RIGID CONDUIT TO CONTROL PANEL.

B1 PIPE MOUNTED PRESSURE TRANSMITTER

NTS

IC-006

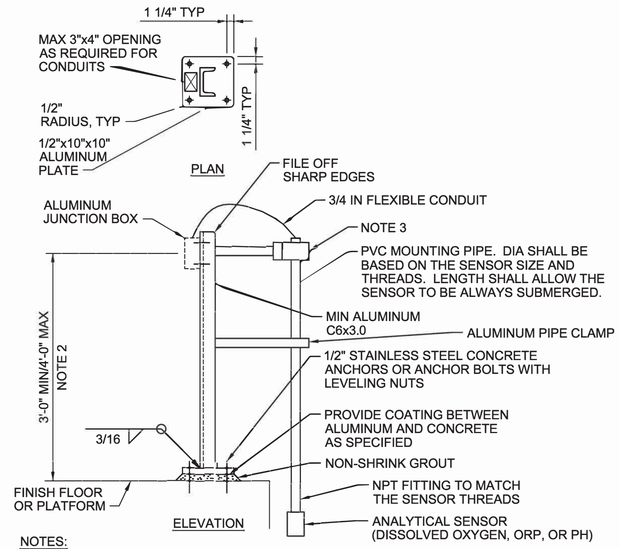

NOTES:

1. ALL MOUNTING HARDWARE SHALL BE STAINLESS STEEL. USE WASHERS AND SPLIT-LOCK WASHERS UNDER ALL NUTS AND BOLTS.
2. FOR HEIGHTS EXCEEDING 4'-0" OR WEIGHTS OF MOUNTED EQUIPMENT EXCEEDING 200 LBS, SIZE POST AND CONNECTION FOR LATERAL LOADS. EXTEND POSTS TO STRUCTURE ABOVE WHERE REQUIRED BY CALCULATION.
3. PROVIDE A 2-WAY SWIVEL JOINT FOR SWINGING THE MOUNTING POLE OUT OF THE WATER FOR SENSOR MAINTENANCE AFTER RELEASING THE ALUMINUM PIPE CLAMP BELOW.

B3 ANALYTICAL SENSOR

NTS

IC-005, IC-006

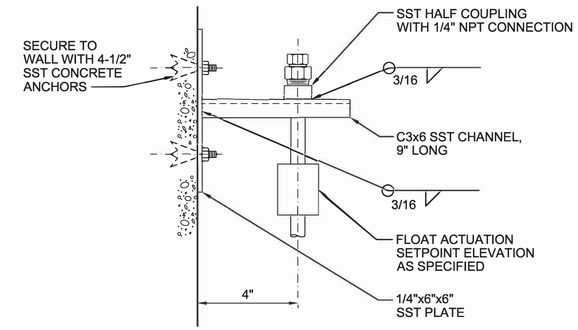

B5 SINGLE FLOAT TYPE LEVEL SWITCH INSTALLATION

NTS

IC-005

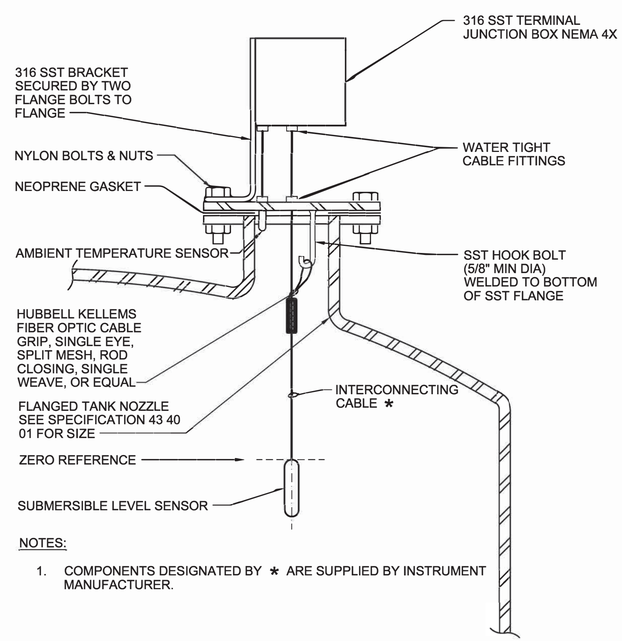

NOTES:

1. COMPONENTS DESIGNATED BY * ARE SUPPLIED BY INSTRUMENT MANUFACTURER.

D1 SUBMERSIBLE LEVEL TRANSMITTER INSTALLATION

NTS

IC-005

STATE OF OHIO
ALAN HWA CHIN LAI
E-67729
3/31/17
REGISTERED PROFESSIONAL ENGINEER

NO.	DATE	REVISION	BY	APVD

DSGN A LAI | DR A LAI | CHK B EMORY | APVD D FISHER | BY A LAI | APVD

VILLAGE OF NEWTONSVILLE
WASTEWATER TREATMENT PLANT & COLLECTION SYSTEM - PART A
CLERMONT COUNTY WATER RESOURCES DEPARTMENT, CLERMONT COUNTY, OHIO

INSTRUMENTATION

TYPICAL DETAILS 2

NTS

VERIFY SCALE

BAR IS ONE INCH ON ORIGINAL DRAWING.
0 1"

DATE	2017-03-31
PROJ	652379
DWG	IC-008
SHEET	71 of 91

BID READY

REUSE OF DOCUMENTS: THIS DOCUMENT, AND THE IDEAS AND DESIGNS INCORPORATED HEREIN, AS AN INSTRUMENT OF PROFESSIONAL SERVICE, IS THE PROPERTY OF CH2M HILL AND IS NOT TO BE USED, IN WHOLE OR IN PART, FOR ANY OTHER PROJECT WITHOUT THE WRITTEN AUTHORIZATION OF CH2M HILL.

©CH2M HILL 2015. ALL RIGHTS RESERVED.

SURVEY CONTROL POINTS

Point Table				
Point #	Description	NORTHING	EASTING	Elevation
202	IRON REBAR W/ CAP SET	432941.92	1517535.71	903.21
203	MAG NAIL SET	433423.06	1517914.34	896.88
204	MAG NAIL SET	433786.09	1518252.54	902.91
205	MAG NAIL SET	434229.46	1518732.63	905.51
206	MAG NAIL SET	434662.35	1518772.98	904.14
207	IRON REBAR W/ CAP SET	435112.15	1518768.42	893.39
208	MAG HUB SET	434639.67	1519022.47	903.82
201	IRON REBAR W/ CAP SET	433054.36	1516513.08	899.41
209	IRON REBAR W/ CAP SET	435205.21	1519544.69	892.66
210	MAG NAIL SET	433501.31	1516723.57	897.89
211	MAG NAIL SET	434590.46	1516774.95	895.73
212	MAG NAIL SET	434501.82	1517827.04	895.21
213	IRON REBAR W/ CAP SET	435030.37	1517409.13	882.69
214	IRON REBAR W/ CAP SET	434469.17	1518292.49	898.68
215	MAG NAIL SET	434434.18	1519051.41	907.65
216	IRON REBAR W/ CAP SET	434363.35	1519793.33	900.96
217	IRON REBAR W/ CAP SET	434319.29	1520369.56	901.33
220	MAG HUB SET	433050.15	1516255.83	901.24
221	IRON REBAR W/ CAP SET	433748.29	1516321.76	898.53
222	MAG HUB SET	434651.63	1516355.46	896.91
223	IRON REBAR W/ CAP SET	434144.90	1516773.28	897.79
224	IRON REBAR W/ CAP SET	434584.82	1517378.06	883.35
225	MAG NAIL SET	434513.40	1517708.75	895.40
226	MAG NAIL SET	434431.97	1518690.58	904.70

HORIZONTAL DATUM : NAD 83
VERTICAL DATUM : NAVD 88

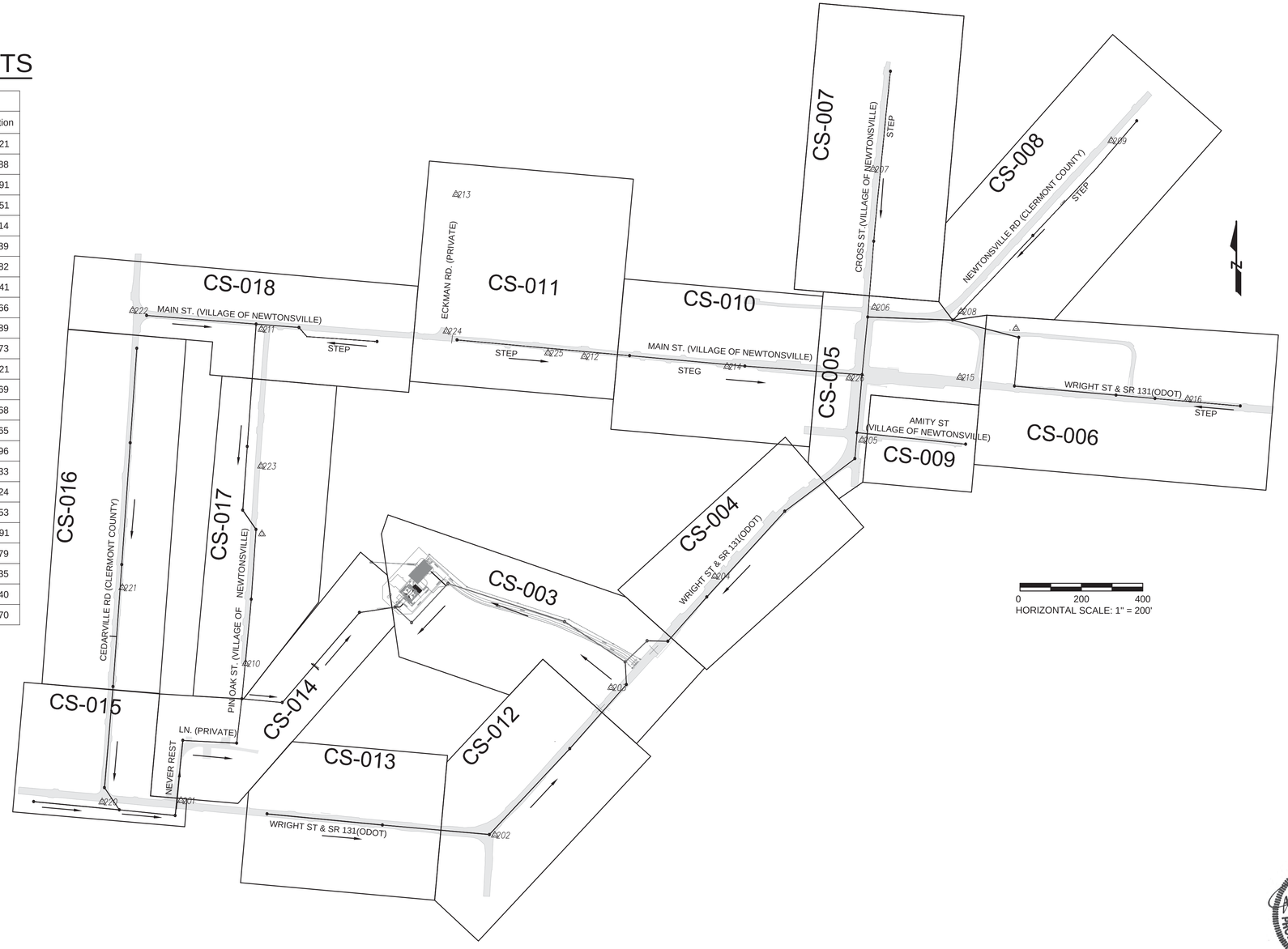

PLAN AND PROFILE LEGEND

- UTILITY POLE
- ELECTRIC POWER
- TELEPHONE
- CABLE
- POLE ANCHOR
- CATCH BASIN
- WATER METER
- FIRE HYDRANT & VALVE
- TREE STUMP
- TREES
- MAIL BOX
- SIGN
- TEST BORE
- LIGHT

JOHN SMITH - INDICATES OWNER
100 S.R. 131 - INDICATES AUDITORS ADDRESS
(AKA 110 WRIGHT ST) - INDICATES MAILING ADDRESS

1 - STEP POD
TOP= (INDICATES TOP OF LID)
INV= (INDICATES INVERT OF THE HOMEOWNERS CONNECTION)
BOTTOM= (INDICATES BOTTOM ELEVATION OF POD)

2 - STEG POD
TOP= (INDICATES TOP OF LID ELEVATION)
INV= (INDICATES INVERT OF THE HOMEOWNERS CONNECTION)
BOTTOM= (INDICATES BOTTOM ELEVATION POD)

3 - 20 AMP PANEL (BY HOMEOWNER) & PUMP CONTROL PANEL (BY CONTRACTOR)

4 - SANITARY 4" BALL VALVE,VALVE BOX AND PLUG FOR FUTURE STEP CONNECTION (REFER TO DETAIL)

- SANITARY BALL VALVE FOR PROPOSED CONNECTION TO LOW PRESSURE FORCE MAIN

- SANITARY CLEAN OUT FOR PROPOSED CONNECTION TO NON-PRESSURE MAIN

PLAN WINDOW ON PLAN AND PROFILE SHEET

CS-008

DRAWING NUMBER

STATE OF OHIO DANIEL JOSEPH MARTIN 70395 REGISTERED PROFESSIONAL ENGINEER 4/17/17

NO.	DATE	REVISION	BY	APVD
DSGN	D. MARTIN	DR E. HAMMONS	CHK D. MARTIN	APVD D. MARTIN

© CH2M HILL 2015 ALL RIGHTS RESERVED.

REUSE OF DOCUMENTS: THIS DOCUMENT, AND THE IDEAS AND DESIGNS INCORPORATED HEREIN, AS AN INSTRUMENT OF PROFESSIONAL SERVICE, IS THE PROPERTY OF CH2M HILL AND IS NOT TO BE USED, IN WHOLE OR IN PART, FOR ANY OTHER PROJECT WITHOUT THE WRITTEN AUTHORIZATION OF CH2M HILL.

Clermont County

VILLAGE OF NEWTONSVILLE
WASTEWATER TREATMENT PLANT & COLLECTION SYSTEM - PART B
CLERMONT COUNTY WATER RESOURCES DEPARTMENT, CLERMONT COUNTY, OHIO

ch2m: RA Consultants, LLC Engineers and Surveyors

CONVEYANCE

KEY PLAN AND SURVEY CONTROL

NTS
VERIFY SCALE
BAR IS ONE INCH ON ORIGINAL DRAWING.
0 1"

DATE	2017-03-31
PROJ	665163
DWG	CS-001
SHEET	72 of 91

BID READY

GENERAL NOTES

1. THE LOCATIONS OF THE EX. UNDERGROUND UTILITIES SHOWN ON THE PLAN HAVE BEEN OBTAINED BY FIELD CHECKS, AND SEARCHES OF AVAILABLE RECORDS. IT IS BELIEVED THAT THEY ARE ESSENTIALLY CORRECT, BUT THE ENGINEER DOES NOT GUARANTEE THEIR ACCURACY OR COMPLETENESS. THE CONTRACTOR IS RESPONSIBLE TO VERIFY LOCATIONS WITH THE UTILITY COMPANIES AND/OR THE OHIO UTILITIES PROTECTION SERVICE AT 1-800-362-2764 NOT LESS THAN 48 HOURS BEFORE STARTING ANY DEMOLITION OR EXCAVATION ACTIVITIES.

2. MARK LOCATION OF UTILITIES. PROTECT AND MAINTAIN UTILITIES THAT ARE TO REMAIN. PREVENT INTERRUPTION OF EXISTING UTILITY SERVICE TO OCCUPIED OR USED FACILITIES, EXCEPT WHEN AUTHORIZED IN WRITING BY AUTHORITIES HAVING JURISDICTION.

3. NOTIFY AFFECTED UTILITY COMPANIES BEFORE STARTING WORK AND COMPLY WITH THEIR REQUIREMENTS.

4. ANY UNDERDRAINS ENCOUNTERED DURING CONSTRUCTION SHALL BE CONNECTED TO STORM SEWER.

5. ALL SANITARY MAINS AND SANITARY SERVICES SHALL BE INSTALLED IN ACCORDANCE WITH LOCAL GOVERNING STANDARDS.

6. ALL UTILITIES WITH A SURFACE PRESENTATION TO BE FIELD ADJUSTED BY CONTRACTOR TO MEET FINAL FIELD CONDITIONS. PROVIDE 1" ADJUSTING RINGS AS NEEDED FOR SANITARY MANHOLES IN PAVED AREAS TO MEET FINAL FIELD CONDITIONS.

7. CLERMONT COUNTY IS RESPONSIBLE FOR OBTAINING PERMITS FOR PUBLIC UTILITY CONNECTIONS, AND ALL WORK IN THE PUBLIC RIGHT-OF-WAY. THE CONTRACTOR SHALL OBTAIN ANY ADDITIONAL REQUIRED PERMITS AND LICENSES FROM APPROPRIATE AUTHORITIES AND PAY ASSOCIATED FEES INCLUDING DISPOSAL CHARGES.

8. SOME UTILITY STRUCTURES ARE SHOWN SCHEMATICALLY AND MAY NOT REPRESENT ACTUAL SIZE OF STRUCTURE.

9. ALL UTILITIES IN PAVEMENT SHALL BE BACKFILLED WITH MATERIAL DESIGNATED BY APPLICABLE PERMIT.

10. CONTRACTOR WILL ENSURE POSITIVE DRAINAGE ON SITE.

11. ALL WORK SHALL CONFORM TO CODES OF ALL GOVERNING AGENCIES FOR CONSTRUCTION, SAFETY, DUST CONTROL, AND RUNOFF CONTROL. OBTAIN REQUIRED PERMITS AND LICENSES FROM APPROPRIATE AUTHORITIES. DO NOT CLOSE OR OBSTRUCT PUBLIC OR PRIVATE ROADWAYS, SIDEWALKS, OR FIRE HYDRANTS WITHOUT APPROPRIATE PERMITS OR WRITTEN AUTHORIZATION.

12. EROSION CONTROL MEASURES TO BE SET PER GOVERNING STANDARDS BY GENERAL CONTRACTOR AS SITE IS CONSTRUCTED.

13. ALL DISTURBED AREAS SHOULD BE SEEDED OR SODDED.

14. REMOVE FROM SITE DEBRIS, RUBBISH, AND OTHER MATERIALS RESULTING FROM CONSTRUCTION OPERATIONS AND DISPOSE OF IN ACCORDANCE WITH ALL REQUIREMENTS OF ALL GOVERNING AGENCIES. LEAVE AREAS OF WORK IN CLEAN CONDITION.

15. NOTIFY OWNER AND ENGINEER IMMEDIATELY OF ANY UNEXPECTED FIELD CONDITIONS. SUCH AS POTENTIAL HAZARDOUS MATERIAL, UNSUITABLE SOIL AND BURIED STRUCTURES.

16. PROTECT EXISTING LANDSCAPING MATERIALS, APPURTENANCES, AND STRUCTURES, WHICH ARE NOT TO BE DEMOLISHED. REPAIR DAMAGE CAUSED BY CONSTRUCTION OPERATIONS.

17. NOTIFY ADJACENT OWNERS OF WORK THAT MAY AFFECT THEIR PROPERTY, POTENTIAL NOISE, UTILITY OUTAGES OR DISRUPTIONS PREVENT MOVEMENT OR SETTLEMENT OF ADJACENT STRUCTURES. PROVIDE BRACING AND SHORING AS NEEDED. MINIMIZE INTERFERENCE WITH ADJACENT STRUCTURES OR PAVEMENTS. CEASE OPERATIONS IMMEDIATELY IF ADJACENT STRUCTURES APPEAR TO BE IN DANGER AND NOTIFY AUTHORITY HAVING JURISDICTION. DO NOT RESUME OPERATIONS UNTIL DIRECTED BY AUTHORITY.

18. ALL TRAFFIC CONTROL WILL CONFORM TO THE REQUIREMENTS OF CLERMONT COUNTY AND ODOT. WHEN PLANS OR STANDARD CONSTRUCTION DRAWINGS DO NOT COVER A SPECIFIC TRAFFIC CONTROL SITUATION, PLACE THE NECESSARY TRAFFIC CONTROL DEVICES ACCORDING TO CLERMONT COUNTY STANDARDS.

19. TRAFFIC SHALL BE MAINTAINED AT ALL TIMES. AT LEAST TWO 10' LANES WILL REMAIN OPEN AND AVAILABLE TO TRAFFIC (ONE LANE IN EACH DIRECTION) AT ALL TIMES OR A FLAGGING OPERATION WILL BE USED TO MOVE TRAFFIC AROUND THE WORK SITE. FLAGGERS SHALL BE IN SIGHT OF EACH OTHER OR IN DIRECT COMMUNICATION AT ALL TIMES. FLAGGER STATIONS SHALL BE LOCATED FAR ENOUGH IN ADVANCE OF THE ACTIVITY AREA SO THAT APPROACHING ROAD USERS WILL HAVE SUFFICIENT DISTANCE TO STOP BEFORE ENTERING THE WORK SPACE. PROVIDE ILLUMINATION TO MARK FLAGGER STATIONS AT NIGHT. ALTERNATIVELY, LANE CLOSURE MAY BE MAINTAINED WITH TRAFFIC SIGNALS AND APPROPRIATE SIGNAGE AND PROVISIONS PER CLERMONT COUNTY.

20. FIELD CONDITIONS MAY REQUIRE CONTRACTOR TO MAKE MINOR MODIFICATIONS TO THE STEP AND STEG POD LOCATION AND ELEVATIONS. PLEASE CONTACT ENGINEER FOR QUESTIONS, OR WHEN MAJOR MODIFICATIONS ARE REQUIRED. ALL MODIFICATIONS SHALL ADHERE TO CLERMONT COUNTY REGULATIONS AND MANUFACTURER RECOMMENDATIONS. ALL MODIFICATIONS SHALL BE CONSISTENT WITH THE INTENT OF CONSTRUCTION PLANS

21. SEE CLERMONT COUNTY WATER RESOURCES DISTRICT SMALL DIAMETER GRAVITY SEWER SYSTEM TANK INSTALLATION INSTRUCTIONS.

22. MAINTAIN 18" MINIMUM CLEARANCE BETWEEN UTILITIES. SANITARY SERVICE LATERALS WITH LESS THAN 18" MINIMUM CLEARANCE FROM A WATER MAIN SHALL BE ENCASED IN CONCRETE.

GENERAL:

23. ALL WORK AND MATERIALS SHALL CONFORM TO THE LATEST RULES AND REGULATIONS OF THE CLERMONT COUNTY WATER RESOURCES DEPARTMENT FOUND AT WRD.CLERMONTCOUNTYOHIO.GOV. IT IS THE INTENT OF THESE CONSTRUCTION DRAWINGS AND SPECIFICATIONS TO DESCRIBE A COMPLETE FUNCTIONING SYSTEM IN ALL RESPECTS, WHETHER OR NOT EVERY SUB-ELEMENT OF THE TOTAL SYSTEM IS ACTUALLY DEFINED IN WRITING AND/OR DETAIL. PAYMENT TO THE CONTRACTOR(S) SHALL BE INFERRED TO COVER WORK AND MATERIALS REQUIRED FOR A COMPLETE FUNCTIONING SYSTEM SUCH THAT WHEN FINAL PAYMENT IS MADE, THE SYSTEM IS COMPLETELY OPERABLE AND FUNCTIONS IN ALL RESPECTS AS REQUIRED BY THE CONTRACT DOCUMENTS.

24. THE WORK TO BE PERFORMED UNDER THESE SPECIFICATIONS INCLUDES FURNISHING ALL MATERIALS, EQUIPMENT, AND LABOR NECESSARY TO COMPLETE THE WORK CALLED FOR IN THE CONTRACT DOCUMENTS.

25. THE CONTRACTOR SHALL PROVIDE ALL NECESSARY ELECTRIC, WATER, SANITARY FACILITIES AND WASTE DISPOSAL TO COMPLETE THE WORK.

26. A SITE VISIT IS HIGHLY RECOMMENDED PRIOR TO SUBMISSION OF BID.

27. CONTRACTOR IS RESPONSIBLE TO PROVIDE SUPPORT TO THE EXISTING UTILITY POLES, AS NECESSARY TO COMPLETE THE WORK CALLED FOR IN THE CONTRACT DRAWINGS AND SPECIFICATIONS.

28. PAVEMENT: ALL PAVEMENT AND/ROADWAY SURFACE DISTURBED BY THE CONTRACTOR, SHALL BE RESTORED BY THE CONTRACTOR AT HIS EXPENSE AND IN CONFORMANCE WITH THE REGULATIONS OF THE GOVERNING AUTHORITY OF SAID ROADWAYS. IN THE ABSENCE OF SUCH REGULATIONS, THE RESTORATION SHALL BE IN ACCORDANCE WITH INSTRUCTIONS BY THE OWNER'S REPRESENTATIVE WITH THE OBJECTION OF RESTORING THE PAVING OR ROADWAY SURFACE TO THE ORIGINAL CONDITION OF SAME.

29. RESTORATION: TEMPORARY RESTORATION AND RESTORATION OUTSIDE OF THE LIMITS OF THIS CONSTRUCTION PROJECT ARE THE RESPONSIBILITY OF THE CONTRACTOR. PRIOR TO CONSTRUCTION, THE CONTRACTOR IS RESPONSIBLE TO VIDEO AND PHOTOGRAPH ALL AREAS THAT WILL BE DISTURBED AS A RESULT OF HIS CONSTRUCTION ACTIVITIES AND WILL DELIVER TO THE OWNER'S REPRESENTATIVE A COPY OF THE VIDEO AND PHOTOGRAPHS. ALL PICTURES SHALL BE LABELED WITH THE LOCATION WHERE TAKEN. NONCOMPLIANCE MAY RESULT IN THE CONTRACTOR'S LIABILITY FOR ALL DISPUTED PROPERTY RESTORATIONS.

30. EROSION CONTROL: THE CONTRACTOR SHALL INSTALL AND MAINTAIN EROSION AND SEDIMENT CONTROL MEASURES AS NECESSARY TO COMPLETE THE WORK AS OUTLINED IN THESE DRAWINGS AND PROJECT SPECIFICATIONS AND TO THE SATISFACTION OF THE OWNER'S REPRESENTATIVE. THIS WORK SHALL INCLUDE THE TIME FOLLOWING THE THIRD PARTY RESTORATION. ALL WORK SHALL BE PREFORMED IN ACCORDANCE WITH THE CLERMONT COUNTY WATER MANAGEMENT AND SEDIMENT CONTROL REGULATIONS AND TO THE SATISFACTION OF THE OWNER'S REPRESENTATIVE

UTILITIES:

31. THE EXISTENCE, LOCATION, AND CONDITION OF UTILITIES AND STRUCTURES, BOTH ABOVE AND BELOW GROUND, SHALL BE INVESTIGATED AND VERIFIED IN THE FIELD BY THE CONTRACTOR BEFORE STARTING WORK. EXCAVATION IN THE VICINITY OF SUCH UTILITIES AND STRUCTURES, SHALL BE DONE CAREFULLY AND BY HAND IF NECESSARY. THE CONTRACTOR SHALL PROTECT ALL SUCH UTILITIES AND STRUCTURES, BOTH MARKED AND UNMARKED, AND BE HELD RESPONSIBLE FOR DAMAGE TO SAME. IT SHALL BE THE RESPONSIBILITY OF THE CONTRACTOR TO ISOLATE, BRACE, SUPPORT, SHEET, ETC. AND PROTECT THE EXISTING UTILITIES FROM MOVING EITHER HORIZONTALLY OR VERTICALLY. IF SUCH MOVEMENT DOES OCCUR DUE TO THE CONTRACTOR'S OPERATIONS, HE SHALL REPAIR THE UTILITY TO THE SATISFACTION OF THE UTILITY OWNER AT THE CONTRACTOR'S EXPENSE. THE CONTRACTOR SHALL GIVE WRITTEN NOTICE TO ALL OWNERS OF ADJACENT UTILITIES, FIXTURES, AND/OR PROPERTY, OF HIS IMPENDING OPERATIONS, BUT IN NO WAY SHALL SUCH NOTICE RELIEVE THE CONTRACTOR OF HIS LIABILITY FOR DAMAGES TO SAID UTILITIES, FIXTURES, AND/OR PROPERTY. THE CONTRACTOR SHALL CONTACT THE APPROPRIATE UTILITY COMPANY AT LEAST 48 HOURS IN ADVANCE OF EXCAVATION IN THE VICINITY OF SAID UTILITY. FIELD LOCATION SHALL BE MADE BY THE UTILITY OR ITS AUTHORIZED AGENCY BEFORE ANY WORK IS PERFORMED BY THE CONTRACTOR. IF AT ANYTIME DURING WORK, AN EXISTING UTILITY IS DAMAGED IN ANY WAY, THE CONTRACTOR SHALL IMMEDIATELY CONTACT THE APPROPRIATE GOVERNING ENTITY AND THE OWNER'S REPRESENTATIVE.

SHUT DOWNS AND SCHEDULING.

- 1 WEEK TO PLAN
- 48 HOURS NOTICE TO AFFECTED CUSTOMERS REQUIRED PRIOR TO SHUTDOWNS
- CONTRACTOR REQUIRED TO DISTRIBUTE THE SHUT DOWN NOTICES PROVIDED BY THE OWNER

STATE OF OHIO
DANIEL JOSEPH MARTIN
70395
REGISTERED
PROFESSIONAL ENGINEER

NO.	DATE	REVISION	BY	APVD

DSGN D MARTIN | DR E. HAMMONS | CHK D MARTIN | APVD D MARTIN

©CH2M HILL 2015. ALL RIGHTS RESERVED.

VILLAGE OF NEWTONSVILLE
WASTEWATER TREATMENT PLANT & COLLECTION SYSTEM - PART B
CLERMONT COUNTY WATER RESOURCES DEPARTMENT, CLERMONT COUNTY, OHIO

CONVEYANCE

NOTES

REUSE OF DOCUMENTS: THIS DOCUMENT, AND THE IDEAS AND DESIGNS INCORPORATED HEREIN, AS AN INSTRUMENT OF PROFESSIONAL SERVICE, IS THE PROPERTY OF CH2M HILL AND IS NOT TO BE USED, IN WHOLE OR IN PART, FOR ANY OTHER PROJECT WITHOUT THE WRITTEN AUTHORIZATION OF CH2M HILL.

NTS

VERIFY SCALE

BAR IS ONE INCH ON ORIGINAL DRAWING.
0 1"

DATE	2017-03-31
PROJ	665163
DWG	CS-002
SHEET	73 of 91

BID READY

MANHOLE	NORTHING	EASTING
1	433,685.20	1,517,210.13
2	433,634.64	1,517,264.37
3	433,762.08	1,517,383.13
4	433,637.99	1,517,762.78
5	433,506.41	1,517,960.51
6	433,575.30	1,517,032.06

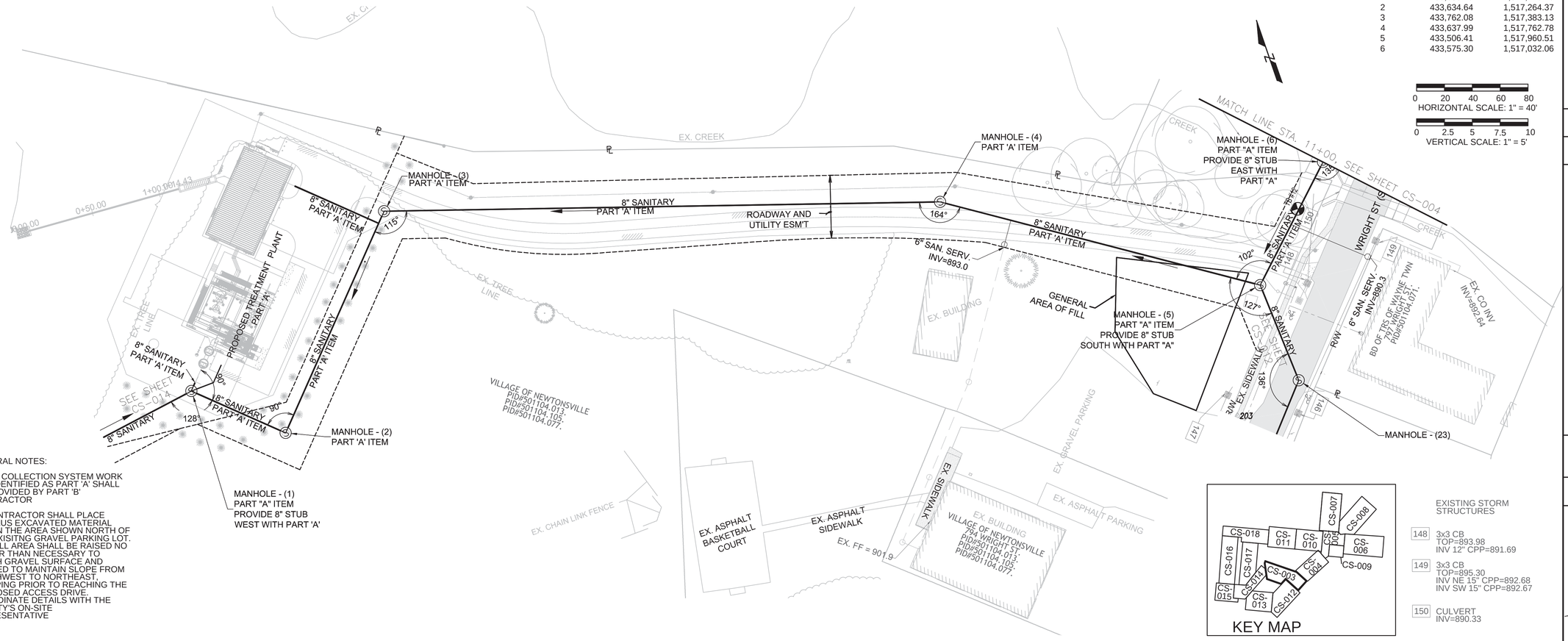

GENERAL NOTES:

1) ALL COLLECTION SYSTEM WORK NOT IDENTIFIED AS PART 'A' SHALL BE PROVIDED BY PART 'B' CONTRACTOR

2) CONTRACTOR SHALL PLACE SURPLUS EXCAVATED MATERIAL WITHIN THE AREA SHOWN NORTH OF THE EXISITNG GRAVEL PARKING LOT. THE FILL AREA SHALL BE RAISED NO HIGHER THAN NECESSARY TO MATCH GRAVEL SURFACE AND GRADED TO MAINTAIN SLOPE FROM SOUTHWEST TO NORTHEAST, STOPPING PRIOR TO REACHING THE PROPOSED ACCESS DRIVE. COORDINATE DETAILS WITH THE COUNTY'S ON-SITE REPRESENTATIVE

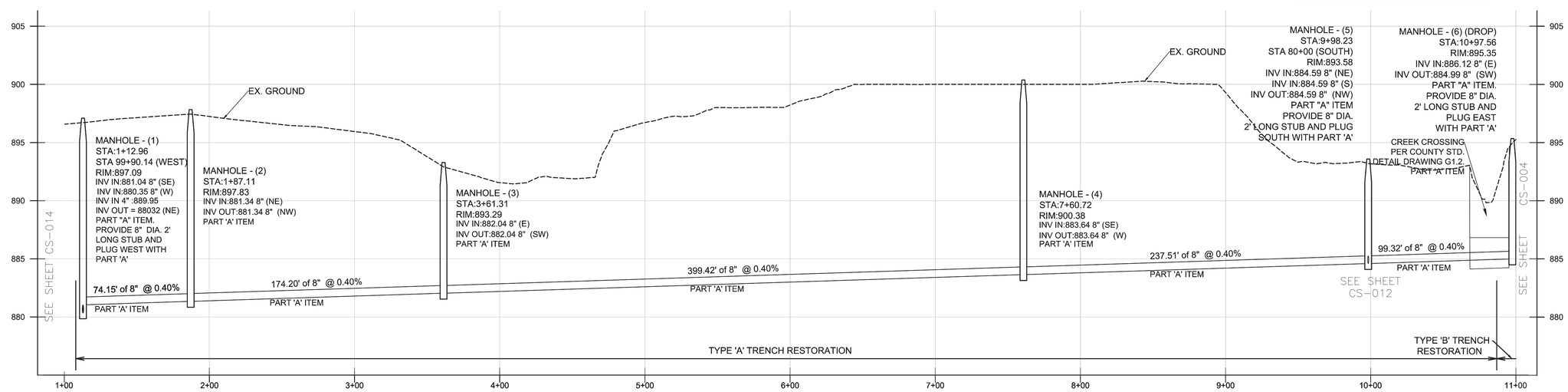

NO.	DATE	REVISION	BY	APVD
DSGN	D. MARTIN	DR E. HAMMONS	CHK D. MARTIN	APVD D. MARTIN

VILLAGE OF NEWTONSVILLE
WASTEWATER TREATMENT PLANT & COLLECTION SYSTEM - PART B
CLERMONT COUNTY WATER RESOURCES DEPARTMENT, CLERMONT COUNTY, OHIO

CONVEYANCE

ACCESS DRIVE STA. 1+00 TO 11+00

1"=40'

VERIFY SCALE

BAR IS ONE INCH ON ORIGINAL DRAWING.
0 1"

DATE	2017-03-31
PROJ	665163
DWG	CS-003
SHEET	74 of 91

BID READY

©CH2M HILL 2015. ALL RIGHTS RESERVED.

REUSE OF DOCUMENTS: THIS DOCUMENT, AND THE IDEAS AND DESIGNS INCORPORATED HEREIN, AS AN INSTRUMENT OF PROFESSIONAL SERVICE, IS THE PROPERTY OF CH2M HILL AND IS NOT TO BE USED, IN WHOLE OR IN PART, FOR ANY OTHER PROJECT WITHOUT THE WRITTEN AUTHORIZATION OF CH2M HILL.

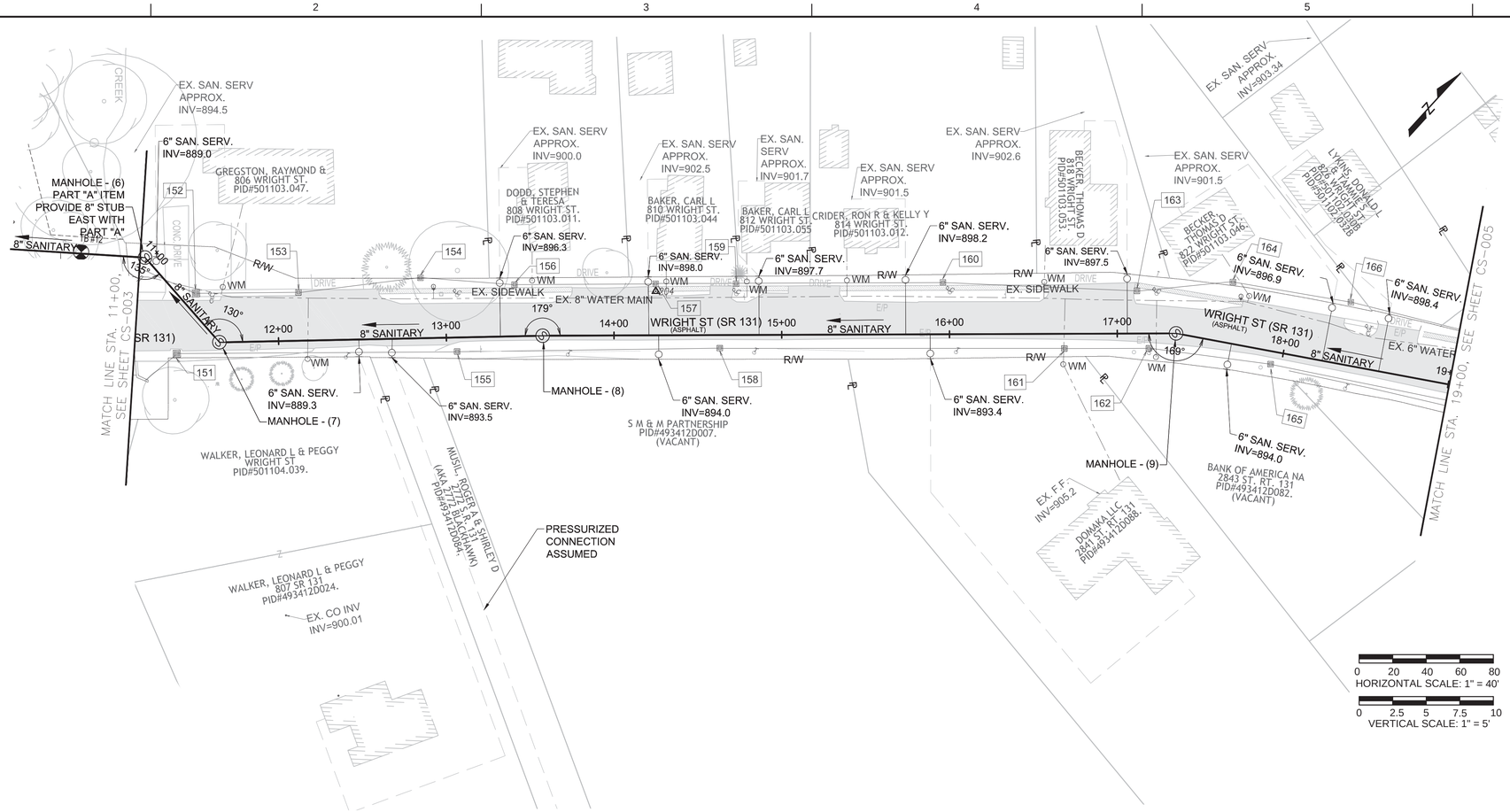

EXISTING STORM STRUCTURES

151 3x3 CB
TOP=896.36
INV NE 15" CPP=893.91
INV=S 15" CPP=893.81

152 3x3 CB
TOP=896.95
INV NE 15" CPP=895.02
INV SW 15" CPP=895.13

153 2x2 CB
TOP=898.79
INV NE 15" CPP=896.84
INV SW 15" CPP=896.89

154 2x2 CB
TOP=900.37
INV NE 15" CPP=897.03
INV SW 15" CPP=897.04

155 3x3 CB
TOP=900.64
INV NE 12" CPP=897.77
INV=SW 12" CPP=897.78

156 2x2 CB
TOP=901.32
INV NE 15" CPP=897.42
INV SW 15" CPP=897.40

157 2x2 CB
TOP=902.63
INV NE 15" CPP=897.92
INV SW 15" CPP=897.89

158 3x3 CB
TOP=901.32
INV NE 12" CPP=898.43
INV=SW 12" CPP=898.37

159 2x2 CB
TOP=902.92
INV NE 12" CPP=898.03
INV SW 15" CPP=898.11

160 2x2 CB
TOP=903.59
INV NE 12" CPP=898.23
INV SW 12" CPP=898.20

161 2x2 CB
TOP=901.98
INV NE 12" CPP=899.06
INV=SW 12" CPP=899.18

162 2x2 CB
TOP=903.30
INV NE 12" CPP=899.71
INV=SW 12" CPP=899.60

163 2x2 CB
TOP=904.07
INV NE 12" CPP=899.40
INV SW 12" CPP=899.35

164 2x2 CB
TOP=903.88
INV NE 12" CPP=900.06
INV SW 12" CPP=900.02

165 2x2 CB
TOP=903.88
INV NE 12" CPP=900.22
INV SW 12" CPP=900.23

166 2x2 CB
TOP=904.17
INV NE 12" CPP=900.27
INV SW 12" CPP=900.29

MANHOLE	NORTHING	EASTING
7	433,573.80	1,518,099.24'
8	433,718.51'	1,518,226.54'
9	433,997.78'	1,518,480.68'

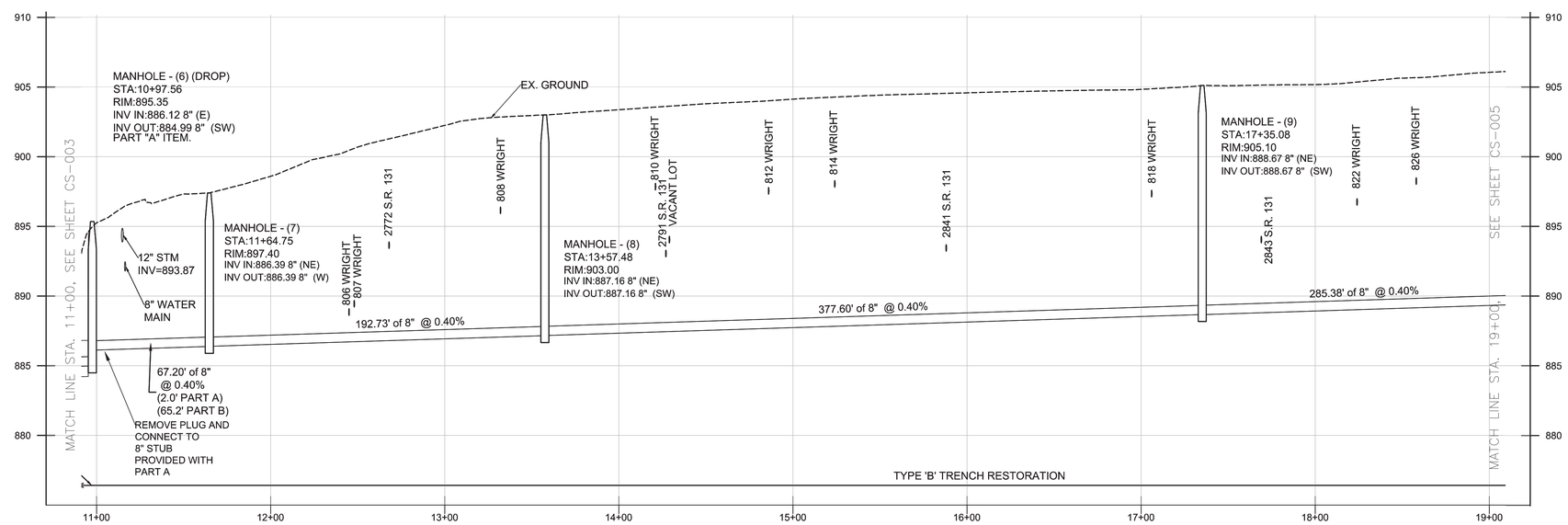

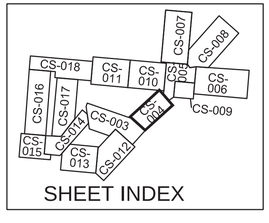

SHEET INDEX

STATE OF OHIO DANIEL JOSEPH MARTIN 70395 REGISTERED PROFESSIONAL ENGINEER

NO.	DATE	REVISION	BY	APVD

DSGN D.MARTIN | DR D.MARTIN | CHK D.MARTIN | APVD D.MARTIN

VILLAGE OF NEWTONSVILLE
WASTEWATER TREATMENT PLANT & COLLECTION SYSTEM - PART B
CLERMONT COUNTY WATER RESOURCES DEPARTMENT, CLERMONT COUNTY, OHIO

CONVEYANCE

WRIGHT STREET
STA. 11+00 TO 19+00

1"=40'

VERIFY SCALE
BAR IS ONE INCH ON ORIGINAL DRAWING.
0 1"

DATE	2017-03-31
PROJ	665163
DWG	CS-004
SHEET	75 of 91

BID READY

REUSE OF DOCUMENTS: THIS DOCUMENT, AND THE IDEAS AND DESIGNS INCORPORATED HEREIN, AS AN INSTRUMENT OF PROFESSIONAL SERVICE, IS THE PROPERTY OF CH2M HILL AND IS NOT TO BE USED, IN WHOLE OR IN PART, FOR ANY OTHER PROJECT WITHOUT THE WRITTEN AUTHORIZATION OF CH2M HILL.
©CH2M HILL 2015. ALL RIGHTS RESERVED.

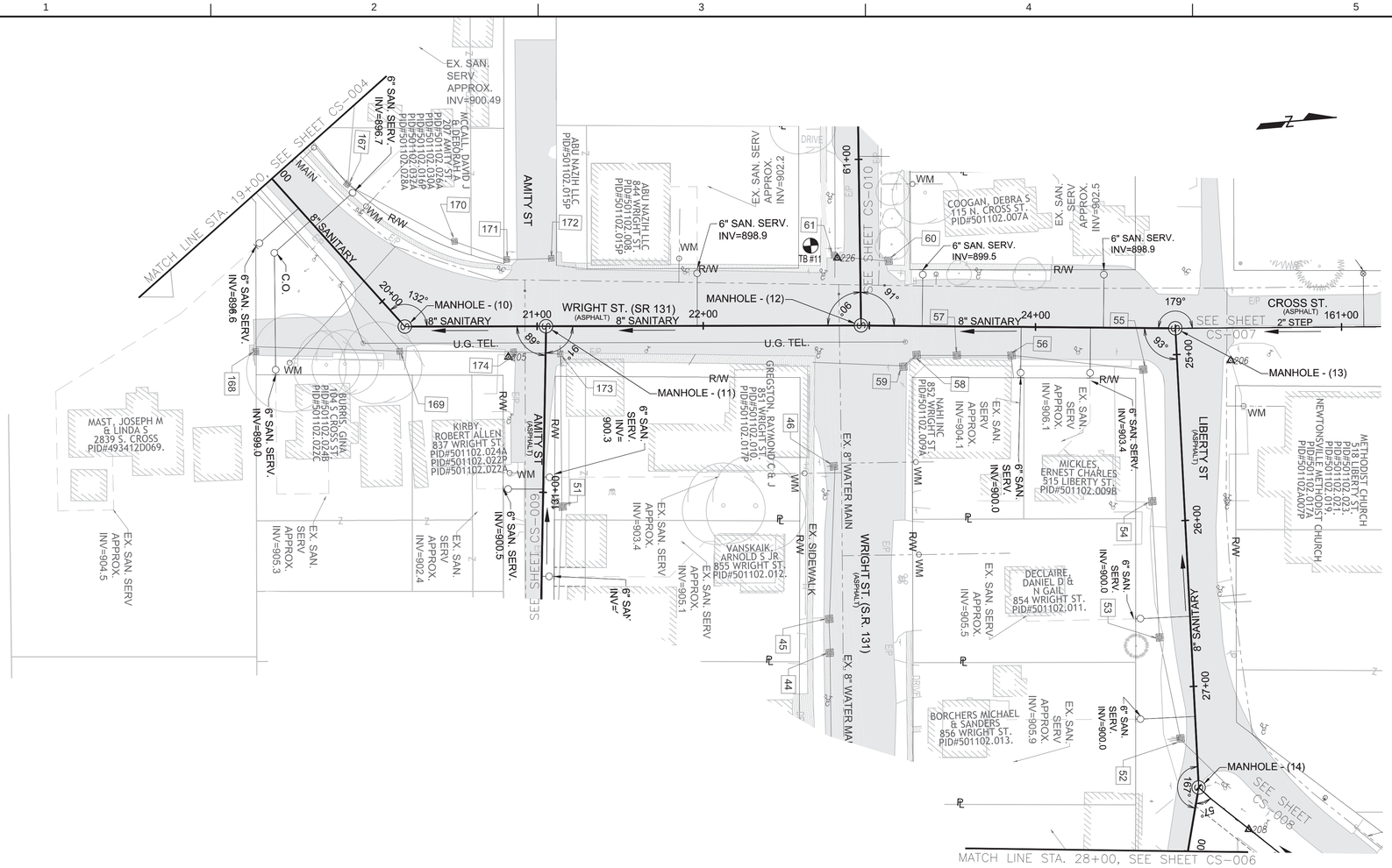

EXISTING STORM STRUCTURES

52 3x3 CB
TOP= 904.04
15" CPP W INV= 901.46
15" CPP E INV= 901.29
4" CPP S TOP= 902.05
4" PVC S TOP= 902.77
4" PVC S TOP= 902.06

53 3x3 CB
TOP= 904.40
15" CPP W INV= 901.61
15" CPP E INV = 901.63

54 3x3 CB
TOP= 905.17
15" CPP W INV= 902.47
15" CPP E INV = 902.43

55 3x3 CB
TOP=904.74
INV S 12" CPP=902.66
INV E 15" CPP=902.50

56 2x2 CB
TOP=905.32
INV N 12" CPP=903.03
INV S 12" CPP=903.17
INV E 4" PVC=904.30

57 2x2 CB
TOP=905.19
INV N 12" CPP=903.32
INV S 12" CPP=903.32

58 2x2 CB
TOP=905.52
INV N 12" CPP=903.50
INV SE 12" CPP=903.69

59 2x2 CB
TOP=905.53
INV NW 12" CPP=903.94
INV S 12" CPP=903.79

60 3x3 CB
TOP=904.52
12" RCP S INV=902.20

61 2x2 CB
TOP=904.73
15" CPP INV=899.56
12" CPP INV=899.70

167 2x2 CB
TOP=904.02
INV SW 12" CPP=900.52
INV NE 12" CPP=900.51

168 2x2 CB
TOP=905.12
INV NE 12" CPP=902.36

169 2x2 CB
TOP=905.05
INV N 12" CPP=901.55
INV E 12" CPP=903.20
INV S 12" CPP=901.57
INV SW 12" CPP=901.49

170 2x2 CB
TOP=904.16
INV N 12" CPP=900.77
INV E 12" CPP=900.76

171 2x2 CB
TOP=904.07
INV N 12" CPP=900.93
INV S 12" CPP=900.87

172 2x2 CB
TOP=903.94
INV S 12" CPP=901.13

173 2x2 CB
TOP=905.00
INV W 12" CPP=902.42
INV E 12" CPP=902.29
INV S 12" CPP=902.30

174 2x2 CB
TOP=905.11
INV E 12" CPP=903.41
INV S 12" CPP=902.21
INV N 12" CPP=902.22

MANHOLE	NORTHING	EASTING
10	434,169.06	1,518,708.95
11	434,253.75	1,518,716.21
12	434,442.63	1,518,732.42
13	434,630.89	1,518,750.78
14	434,620.55	1,519,027.36

0 20 40 60 80
HORIZONTAL SCALE: 1" = 40'
0 2.5 5 7.5 10
VERTICAL SCALE: 1" = 5'

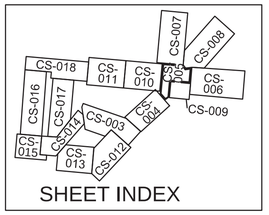

SHEET INDEX

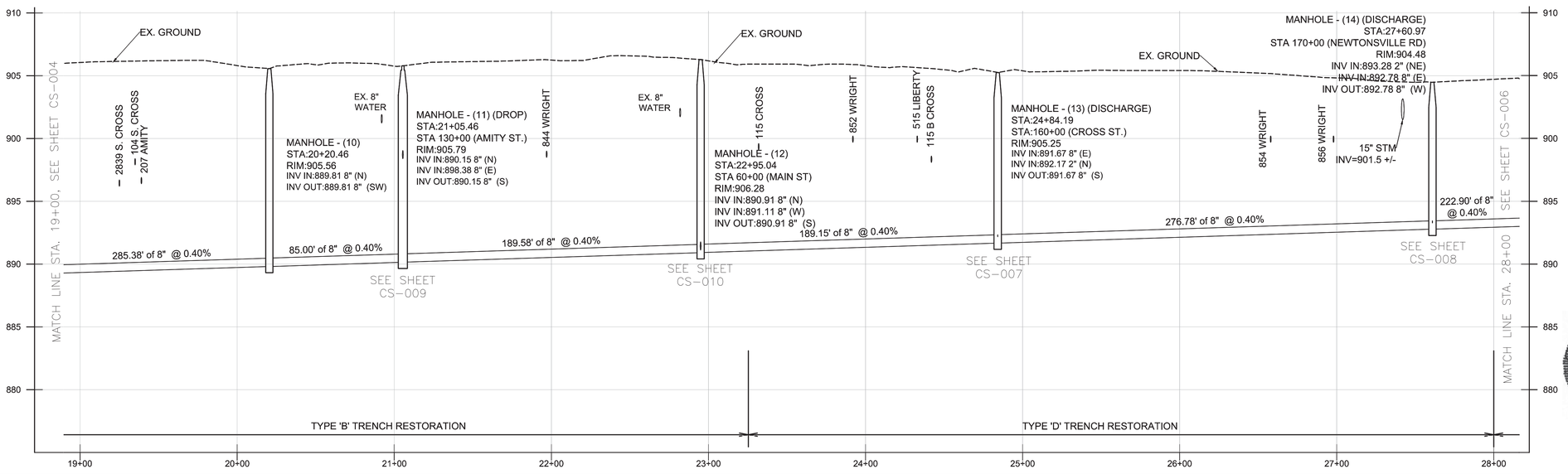

STATE OF OHIO
DANIEL JOSEPH MARTIN
70395
REGISTERED
PROFESSIONAL ENGINEER

NO.	DATE	DR	REVISION	CHK	APVD	BY	APVD
DSGN	D. MARTIN	E. HAMMONS		D MARTIN	D MARTIN		D MARTIN

Clermont County

VILLAGE OF NEWTONSVILLE
WASTEWATER TREATMENT PLANT & COLLECTION SYSTEM - PART B
CLERMONT COUNTY WATER RESOURCES DEPARTMENT, CLERMONT COUNTY, OHIO

ch2m

RA Consultants, LLC Engineers and Surveyors 7870 Beechmont Avenue Cincinnati, Ohio 45255

CONVEYANCE

WRIGHT ST., CROSS ST. & LIBERTY ST. STA. 19+00 TO 28+00

1"=40'

VERIFY SCALE
BAR IS ONE INCH ON ORIGINAL DRAWING.
0 1"

DATE	2017-03-31
PROJ	665163
DWG	CS-005
SHEET	76 of 91

BID READY

REUSE OF DOCUMENTS: THIS DOCUMENT, AND THE IDEAS AND DESIGNS INCORPORATED HEREIN, AS AN INSTRUMENT OF PROFESSIONAL SERVICE, IS THE PROPERTY OF CH2M HILL AND IS NOT TO BE USED, IN WHOLE OR IN PART, FOR ANY OTHER PROJECT WITHOUT THE WRITTEN AUTHORIZATION OF CH2M HILL.
©CH2M HILL 2015. ALL RIGHTS RESERVED.

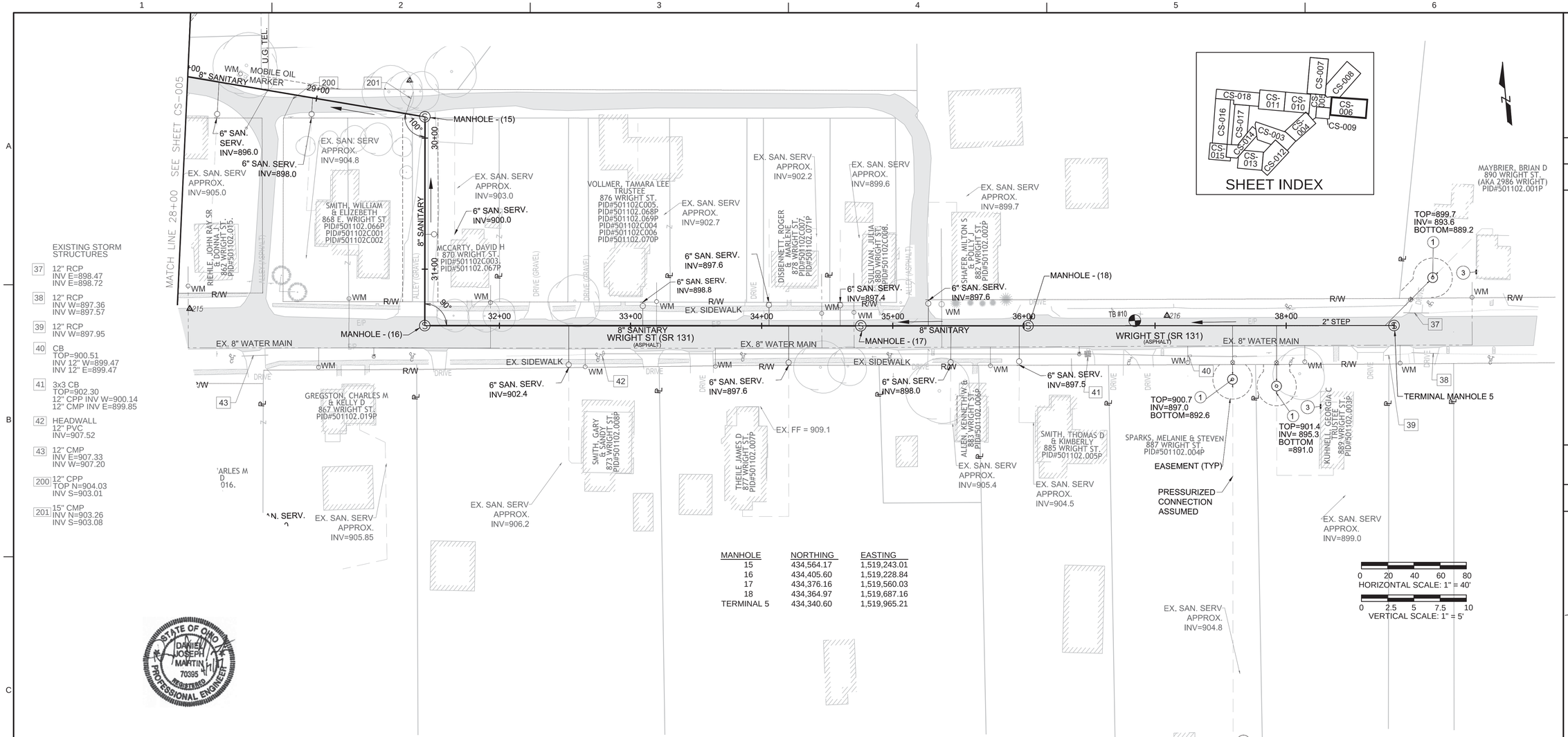

MANHOLE	NORTHING	EASTING
15	434,564.17	1,519,243.01
16	434,405.60	1,519,228.84
17	434,376.16	1,519,560.03
18	434,364.97	1,519,687.16
TERMINAL 5	434,340.60	1,519,965.21

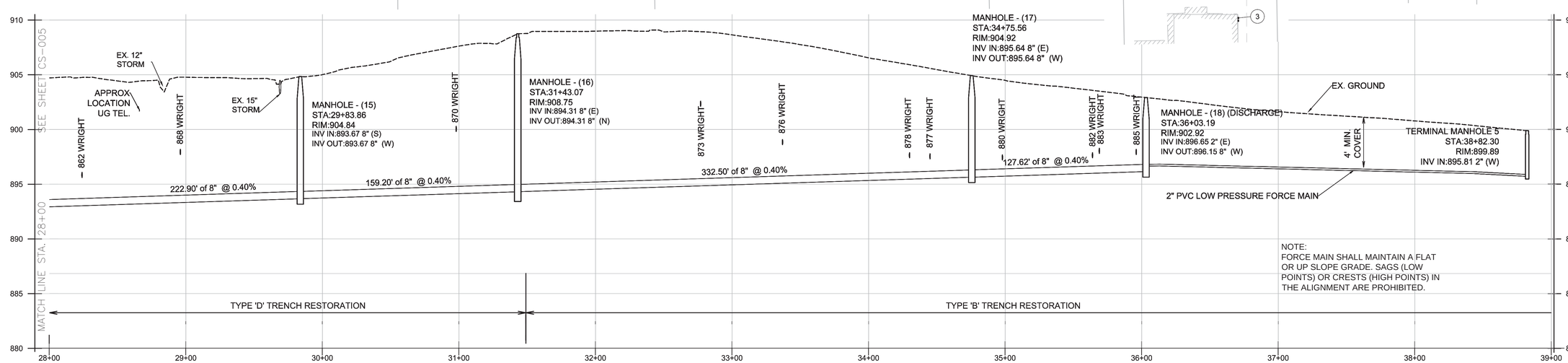

NO.	DATE	REVISION	BY	APVD

DSGN D. MARTIN | DR E. HAMMONS | CHK D. MARTIN | APVD D. MARTIN

VILLAGE OF NEWTONSVILLE
WASTEWATER TREATMENT PLANT & COLLECTION SYSTEM - PART B
CLERMONT COUNTY WATER RESOURCES DEPARTMENT, CLERMONT COUNTY, OHIO

CONVEYANCE

WRIGHT STREET STA. 28+00 TO 38+82

1"=40'

VERIFY SCALE
BAR IS ONE INCH ON ORIGINAL DRAWING.
0 1"

DATE	2017-03-31
PROJ	665163
DWG	CS-006
SHEET	77 of 91

BID READY

REUSE OF DOCUMENTS: THIS DOCUMENT, AND THE IDEAS AND DESIGNS INCORPORATED HEREIN, AS AN INSTRUMENT OF PROFESSIONAL SERVICE, IS THE PROPERTY OF CH2M HILL AND IS NOT TO BE USED, IN WHOLE OR IN PART, FOR ANY OTHER PROJECT WITHOUT THE WRITTEN AUTHORIZATION OF CH2M HILL.
©CH2M HILL 2015. ALL RIGHTS RESERVED.

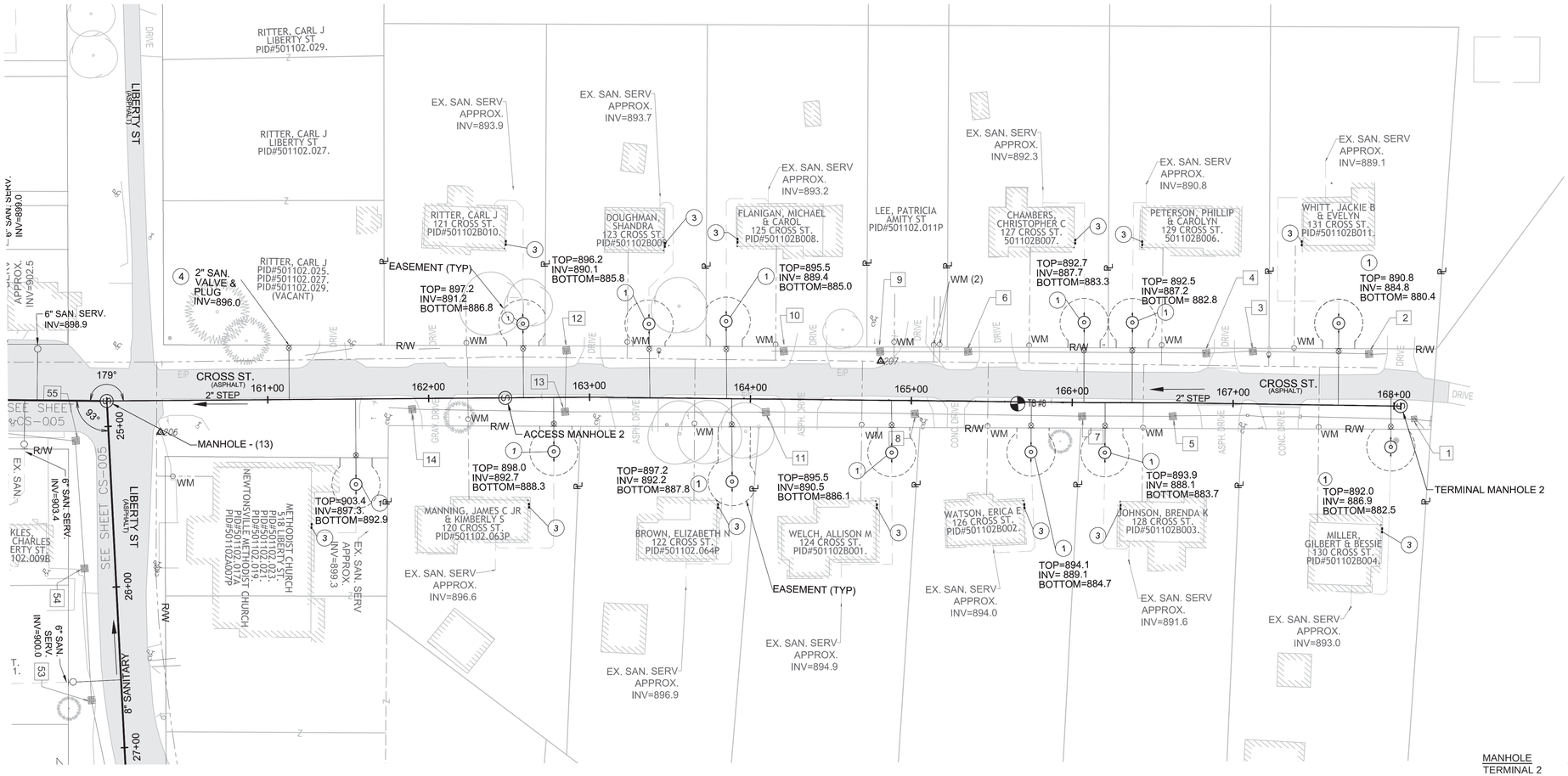

MANHOLE	NORTHING	EASTING
TERMINAL 2	435,431.68	1,518,824.74
ACCESS 2	434,877.77	1,518,770.69

HORIZONTAL SCALE: 1" = 40'

VERTICAL SCALE: 1" = 5'

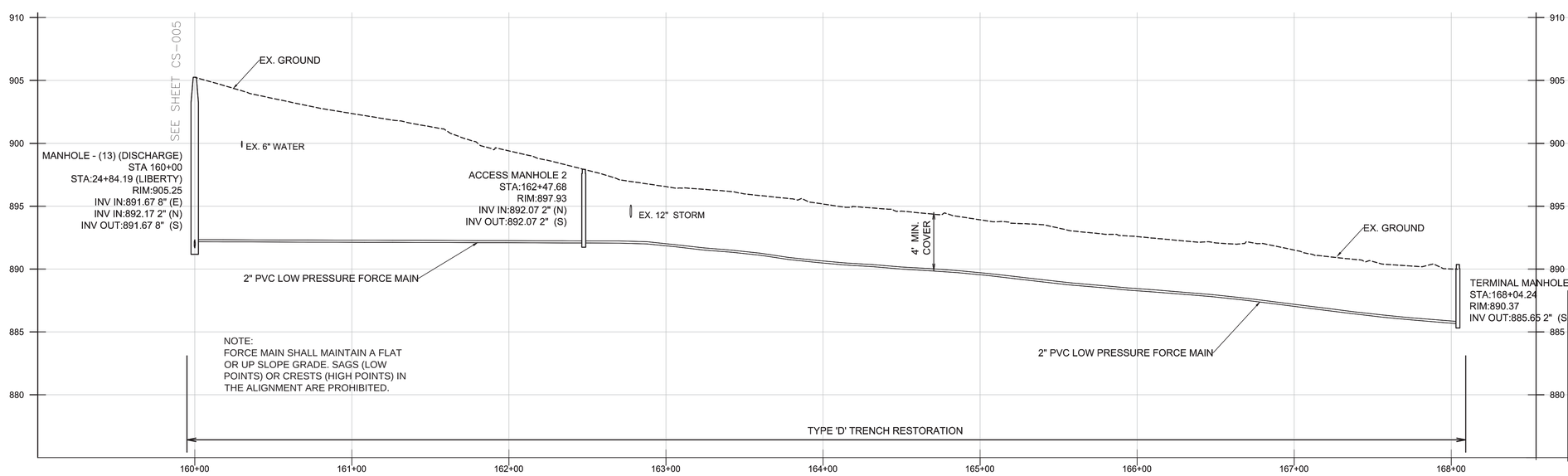

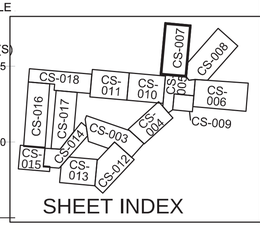

SHEET INDEX

STATE OF OHIO
DANIEL JOSEPH MARTIN
70395
REGISTERED
PROFESSIONAL ENGINEER

NO.	DATE	DR	REVISION	CHK	APVD	BY	APVD

DSGN D. MARTIN | DR E. HAMMONS | CHK D. MARTIN | APVD D. MARTIN

Clermont County

VILLAGE OF NEWTONSVILLE
WASTEWATER TREATMENT PLANT &
COLLECTION SYSTEM - PART B
CLERMONT COUNTY WATER RESOURCES
DEPARTMENT, CLERMONT COUNTY, OHIO

ch2m: Consultants, LLC Engineers and Surveyors

CONVEYANCE

CROSS STREET
STA. 160+00 TO 168+04

1"=40'

VERIFY SCALE

BAR IS ONE INCH ON ORIGINAL DRAWING.
0 1"

DATE	2017-03-31
PROJ	665163
DWG	CS-007
SHEET	78 of 91

BID READY

©CH2M HILL 2015 ALL RIGHTS RESERVED.
REUSE OF DOCUMENTS: THIS DOCUMENT, AND THE IDEAS AND DESIGNS INCORPORATED HEREIN, AS AN INSTRUMENT OF PROFESSIONAL SERVICE, IS THE PROPERTY OF CH2M HILL AND IS NOT TO BE USED, IN WHOLE OR IN PART, FOR ANY OTHER PROJECT WITHOUT THE WRITTEN AUTHORIZATION OF CH2M HILL.

EXISTING STORM STRUCTURES

15 15" CPP INV=889.97
16 15" CMP STM INV SW=889.95 INV NE=890.35
17 12" RCP STM INV SW=891.69 INV NE=891.90
18 15" CPP INV=890.97
19 12" RCP STM INV SW=893.62 INV NE=894.23
20 15" CMP STM NE HEADWALL INV=891.57 SW HEADWALL INV=892.02
21 4" PVC INV=893.86
22 12" CMP STM SW INV-895.35 NE INV-896.21
23 15" CMP STM SW INV=893.70 NE INV=894.37
24 DRAIN TOP=897.47 15" CPP STM =895.59
25 15" CPP INV=895.26
26 12" CPP STM SW INV=896.69 NE INV=896.77
27 12" RCP STM SW INV=896.85 NE INV=897.13
28 DRAIN TOP=896.13 12" CPP STM INV=896.12
29 DRAIN TOP=898.07 12" CPP STM INV=896.41
30 12" CPP STM INV=896.56

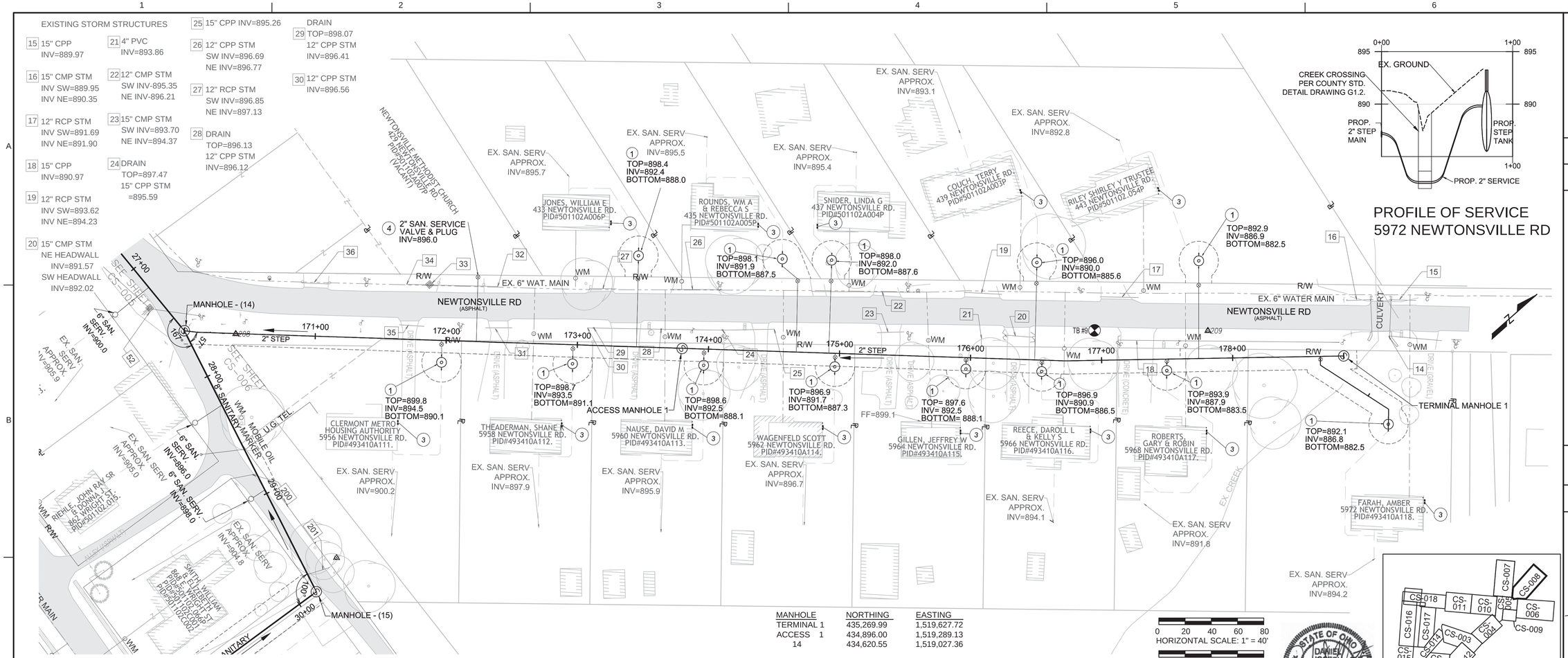

PROFILE OF SERVICE 5972 NEWTONSVILLE RD

MANHOLE	NORTHING	EASTING
TERMINAL 1	435,269.99	1,519,627.72
ACCESS 1	434,896.00	1,519,289.13
14	434,620.55	1,519,027.36

0 20 40 60 80
HORIZONTAL SCALE: 1" = 40'
0 2.5 5 7.5 10
VERTICAL SCALE: 1" = 5'

STATE OF OHIO DANIEL JOSEPH MARTIN 70395 REGISTERED PROFESSIONAL ENGINEER

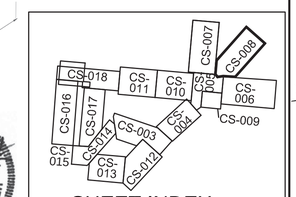

SHEET INDEX

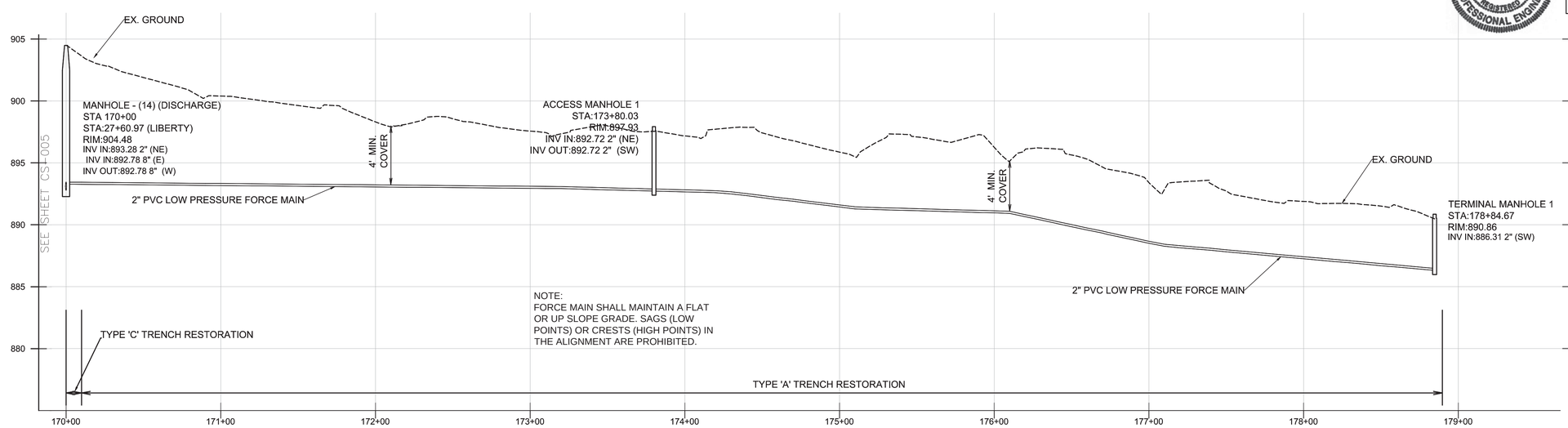

EXISTING STORM STRUCTURES

31 12" CMP STM SW INV=897.03 NE INV=897.08
32 12" CPP STM INV=897.49
33 3x3 CB TOP=899.71 INV NE 12" CPP =898.02 INV SW 12" CPP =898.03
34 12" CPP STM INV=898.43
35 15" CMP STM SW INV=897.79 NE INV=897.65
36 12" CMP STM. NE INV=900.16 SW INV=899.85

NO.	DATE	REVISION	BY	APVD
DSGN	D. MARTIN	DR E. HAMMONS	CHK D. MARTIN	APVD D. MARTIN

Clermont County

VILLAGE OF NEWTONSVILLE
WASTEWATER TREATMENT PLANT & COLLECTION SYSTEM - PART B
CLERMONT COUNTY WATER RESOURCES DEPARTMENT, CLERMONT COUNTY, OHIO

ch2m: RA Consultants, LLC Engineers and Surveyors

CONVEYANCE

NEWTONSVILLE ROAD
STA. 170+00 TO 178+85

1"=40'
VERIFY SCALE
BAR IS ONE INCH ON ORIGINAL DRAWING.
0 1"

DATE	2017-03-31
PROJ	665163
DWG	CS-008
SHEET	79 of 91

BID READY

REUSE OF DOCUMENTS: THIS DOCUMENT, AND THE IDEAS AND DESIGNS INCORPORATED HEREIN, AS AN INSTRUMENT OF PROFESSIONAL SERVICE, IS THE PROPERTY OF CH2M HILL AND IS NOT TO BE USED, IN WHOLE OR IN PART, FOR ANY OTHER PROJECT WITHOUT THE WRITTEN AUTHORIZATION OF CH2M HILL.
©CH2M HILL 2015 ALL RIGHTS RESERVED.

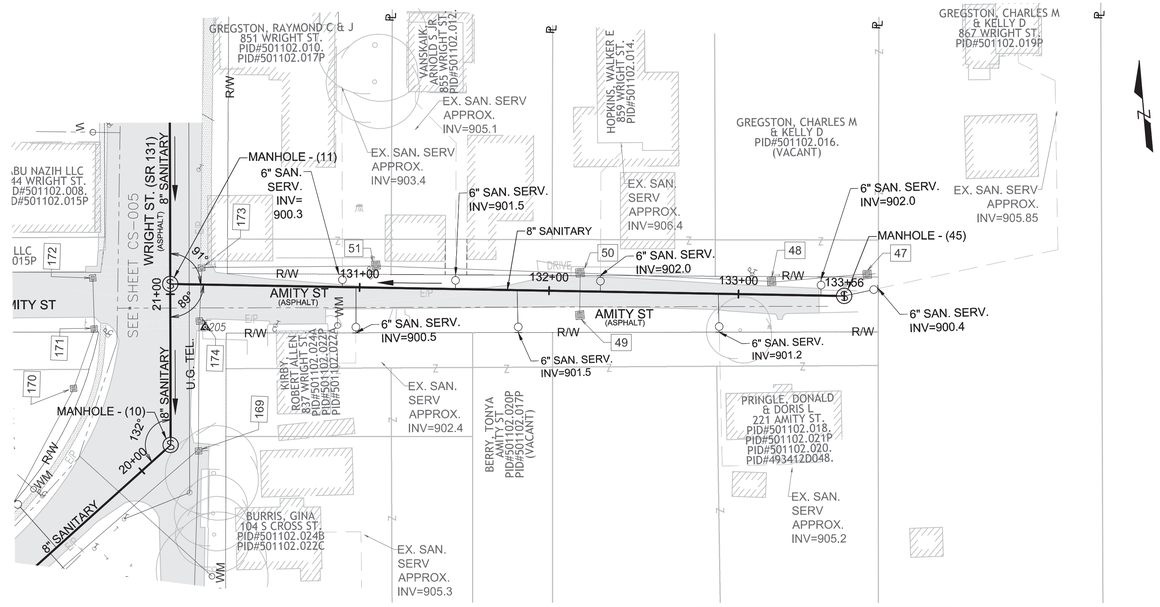

MANHOLE	NORTHING	EASTING
11	434,253.75	1,518,716.21
45	434,216.10	1,519,070.07

EXISTING STORM STRUCTURES

47 — 47 3x3 CB
TOP=907.20
12" CPP W INV=904.65
12" CPP E INV=904.70

48 — 48 3x3 CB
TOP=906.52
12" CPP W INV=904.12
12"CPP E INV=904.35

49 — 49 3x3 CB
TOP=906.18
12" CPP N INV=903.49

50 — 50 3x3 CB
TOP=906.96
12" CPP W INV=903.37
12" CPP E INV=903.42
12" CPP S INV=903.45

51 — 51 3x3 CB
TOP=905.12
12" CPP W INV=902.88
12" CPP E INV=902.88
12" CPP S INV=903.18

173 — 2x2 CB
TOP=905.00
INV W 12" CPP=902.42
INV E 12" CPP=902.29
INV S 12" CPP=902.30

174 — 2x2 CB
TOP=905.11
INV N 12" CPP=902.22
INV E 12" CPP=903.41
INV S 12" CPP=902.21

0 20 40 60 80
HORIZONTAL SCALE: 1" = 40'

0 2.5 5 7.5 10
VERTICAL SCALE: 1" = 5'

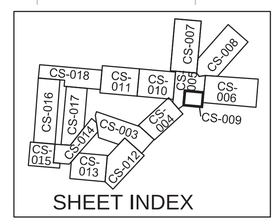

SHEET INDEX

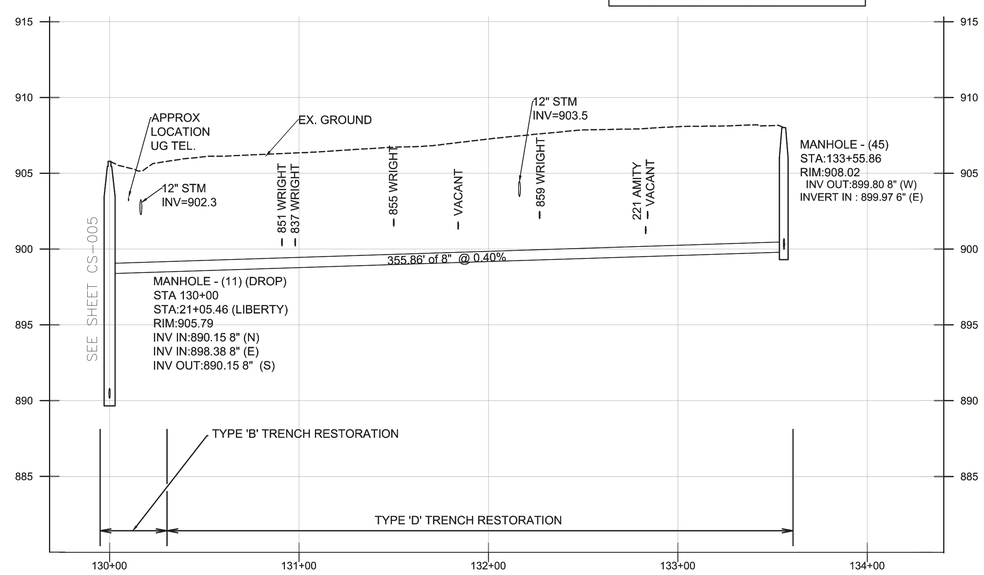

STATE OF OHIO
DANIEL JOSEPH MARTIN
70395
REGISTERED
PROFESSIONAL ENGINEER
4/7/17

NO.	DATE	REVISION	BY	APVD

DSGN D. MARTIN | DR E. HAMMONS | CHK D. MARTIN | APVD D. MARTIN

Clermont County

VILLAGE OF NEWTONSVILLE
WASTEWATER TREATMENT PLANT & COLLECTION SYSTEM - PART B
CLERMONT COUNTY WATER RESOURCES DEPARTMENT, CLERMONT COUNTY, OHIO

ch2m: RA Consultants, LLC Engineers and Surveyors

CONVEYANCE

AMITY ST.
STA. 130+00 TO 133+56

REUSE OF DOCUMENTS: THIS DOCUMENT, AND THE IDEAS AND DESIGNS INCORPORATED HEREIN, AS AN INSTRUMENT OF PROFESSIONAL SERVICE, IS THE PROPERTY OF CH2M HILL AND IS NOT TO BE USED, IN WHOLE OR IN PART, FOR ANY OTHER PROJECT WITHOUT THE WRITTEN AUTHORIZATION OF CH2M HILL.

©CH2M HILL 2015 ALL RIGHTS RESERVED.

1"=40'
VERIFY SCALE
BAR IS ONE INCH ON ORIGINAL DRAWING.
0 1"

DATE	2017-03-31
PROJ	665163
DWG	CS-009
SHEET	80 of 91

BID READY

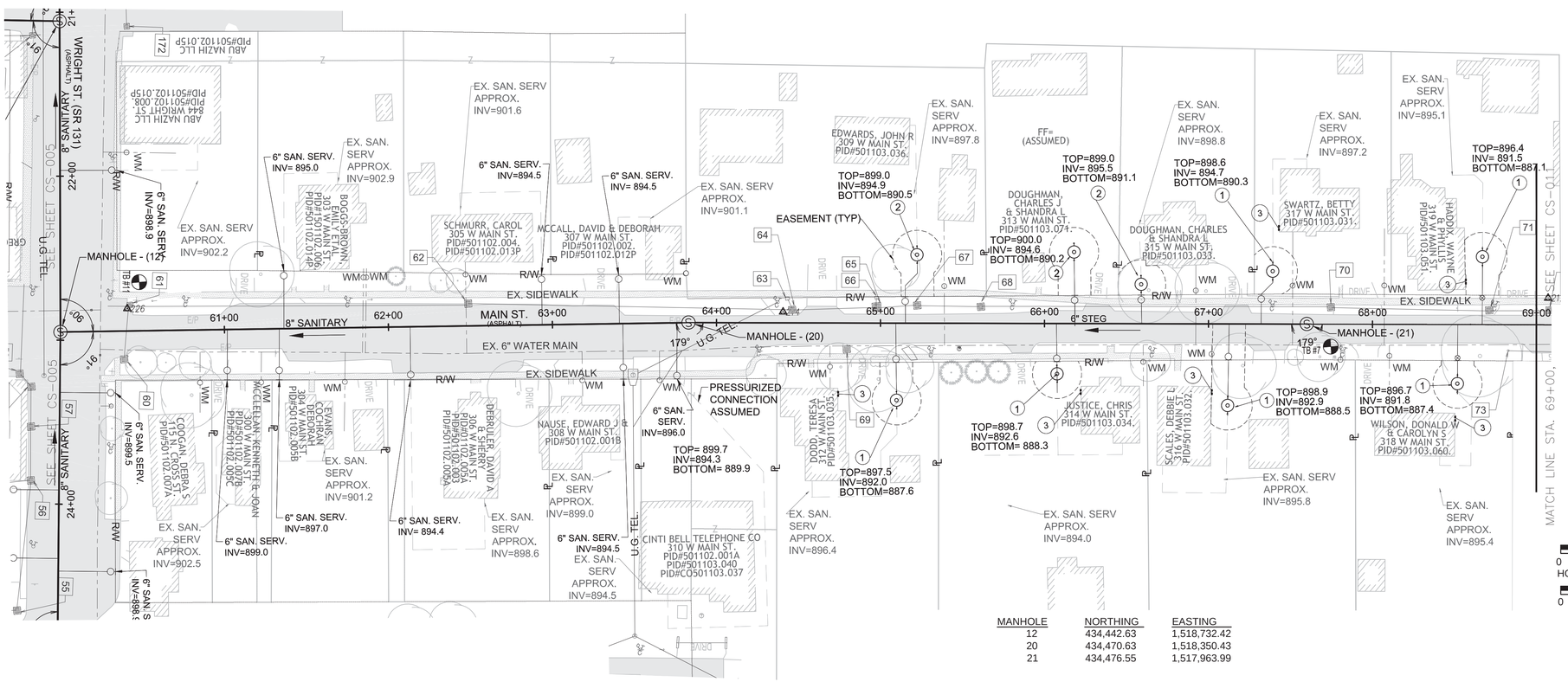

MANHOLE	NORTHING	EASTING
12	434,442.63	1,518,732.42
20	434,470.63	1,518,350.43
21	434,476.55	1,517,963.99

EXISTING STORM STRUCTURES

60 3x3 CB
TOP=904.52
12" RCP S INV=902.20

61 2x2 CB
TOP=904.73
15" CPP W INV=899.56
12" CPP E INV=899.70

62 3x3 CB
TOP=901.72
18" RCP E&W INV=897.36

63 3x3 CB
TOP=897.07
12" RCP N INV=896.34

64 3x3 CB
TOP=898.32
18" CPP INV W=895.87
18" CPP INV E=895.90
12" CPP INV S=896.23

65 3x3 CB
TOP=898.32
18" CPP INV W=895.63
18" CPP INV E=895.47
12" CPP INV S=896.90

66 3x3 CB
TOP=897.51
CLAY INV W=897.02

67 3x3 CB
TOP=897.47
8" RCP INV W=895.78
12" RCP INV E=895.69

68 3x3 CB
TOP=897.87
4" PVC INV SW=896.77
8" RCP INV E =896.18

69 3x3 CB
TOP=897.90
FULL OF DEBRIS

70 3x3 CB
TOP=896.12
15" RCP INV=893.87

71 3x3 CB
TOP=895.36
15" RCP INV=892.50
15" RCP INV=892.51

72 3x3 CB
TOP=895.19
18" RCP INV=894.91
18" RCP INV=892.05

73 STORM DRAIN
TOP=894.87
INV=893.57

74 3x3 CB
TOP=894.92
12" RCP INV E=893.15
12" RCP INV W=893.12
4" PVC INV NW=894.57

0 20 40 60 80
HORIZONTAL SCALE: 1" = 40'

0 2.5 5 7.5 10
VERTICAL SCALE: 1" = 5'

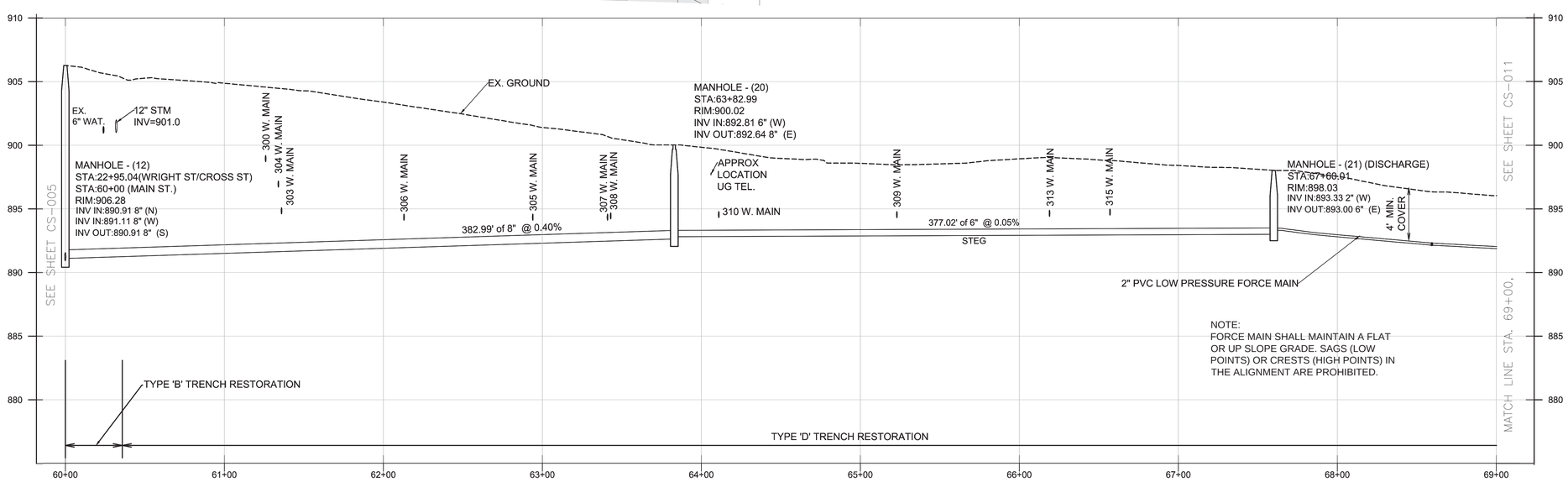

NOTE:
FORCE MAIN SHALL MAINTAIN A FLAT OR UP SLOPE GRADE. SAGS (LOW POINTS) OR CRESTS (HIGH POINTS) IN THE ALIGNMENT ARE PROHIBITED.

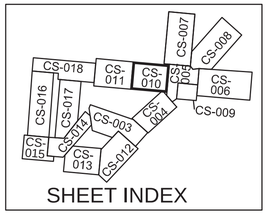

SHEET INDEX

STATE OF OHIO
DANIEL JOSEPH MARTIN
70395
REGISTERED
PROFESSIONAL ENGINEER

NO.	DATE	REVISION	BY	APVD

DSGN D. MARTIN | DR E. HAMMONS | CHK D. MARTIN | APVD D. MARTIN

Clermont County

VILLAGE OF NEWTONSVILLE
WASTEWATER TREATMENT PLANT &
COLLECTION SYSTEM - PART B
CLERMONT COUNTY WATER RESOURCES
DEPARTMENT, CLERMONT COUNTY, OHIO

ch2m:

RA Consultants, LLC
Engineers and Surveyors
Building Relationships

CONVEYANCE

MAIN STREET
STA. 60+00 TO 69+00

REUSE OF DOCUMENTS: THIS DOCUMENT, AND THE IDEAS AND DESIGNS INCORPORATED HEREIN, AS AN INSTRUMENT OF PROFESSIONAL SERVICE, IS THE PROPERTY OF CH2M HILL AND IS NOT TO BE USED, IN WHOLE OR IN PART, FOR ANY OTHER PROJECT WITHOUT THE WRITTEN AUTHORIZATION OF CH2M HILL.

©CH2M HILL 2015 ALL RIGHTS RESERVED.

1"=40'
VERIFY SCALE
BAR IS ONE INCH ON ORIGINAL DRAWING.
0 1"

DATE	2017-03-31
PROJ	665163
DWG	CS-010
SHEET	81 of 91

BID READY

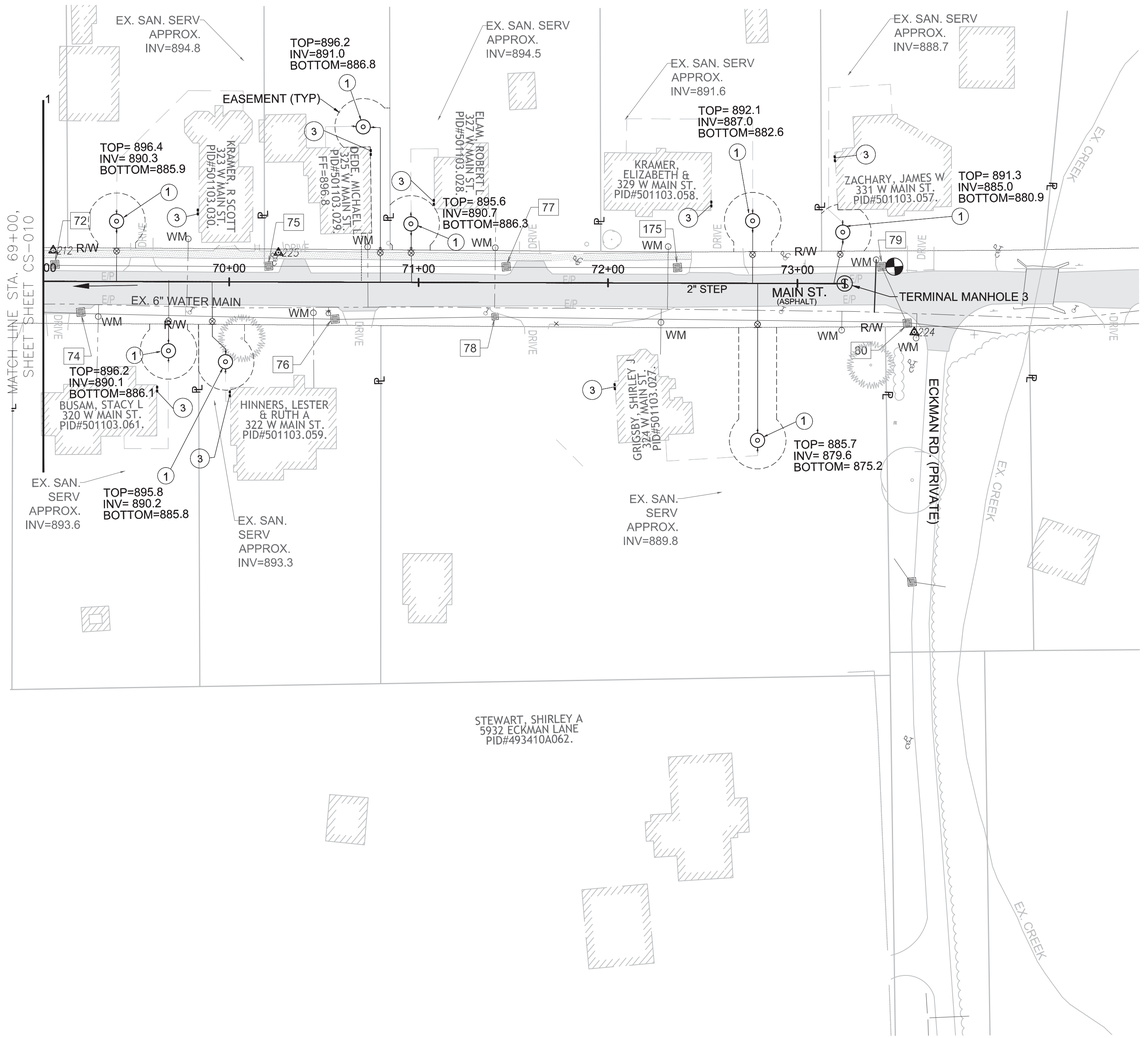

MANHOLE	NORTHING	EASTING
TERMINAL 3	434,556.04	1,517,412.35

EXISTING STORM STRUCTURES

75	3x3 CB TOP=894.84 18" RCP INV=890.27 18" RCP INV=890.38
76	2x2 CB TOP=904.19 12" CPP INV W=891.80 12" CPP INV E=891.88
77	3x3 CB TOP=892.94 18" RCP INV=888.79 18" RCP INV=888.85
78	2x2 CB TOP=892.25 12" CPP INV W=889.90 12" CPP INV E=889.89
79	3x3 CB TOP=885.42 18" RCP E INV=882.24 18" RCP N INV=882.21
80	2x2 CB TOP=904.73 21" CPP INV W=880.48 15" CPP INV E=882.11 18" RCP INV SE=880.98
175	175 3x3 CB TOP=891.16 18" RCP INV=885.85 18" RCP W INV=885.90

0 20 40 60 80
HORIZONTAL SCALE: 1" = 40'

0 2.5 5 7.5 10
VERTICAL SCALE: 1" = 5'

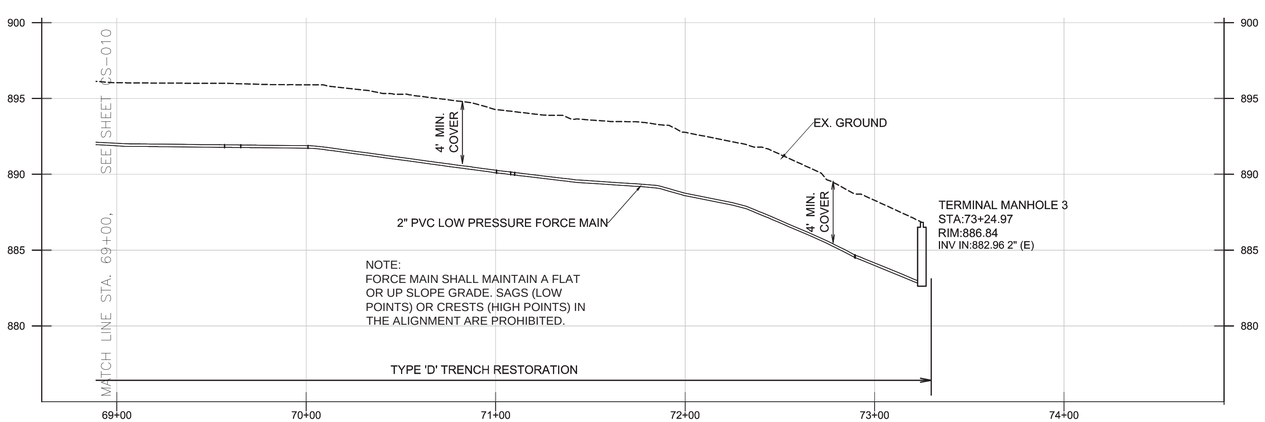

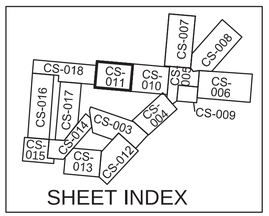

STATE OF OHIO DANIEL JOSEPH MARTIN 70395 REGISTERED PROFESSIONAL ENGINEER

NO.	DATE	REVISION	BY	APVD

DSGN	D. MARTIN	DR	E. HAMMONS	CHK	D. MARTIN	APVD	D. MARTIN

VILLAGE OF NEWTONSVILLE
WASTEWATER TREATMENT PLANT & COLLECTION SYSTEM - PART B
CLERMONT COUNTY WATER RESOURCES DEPARTMENT, CLERMONT COUNTY, OHIO

CONVEYANCE

MAIN STREET
STA.69+00 TO 73+25

1"=40'
VERIFY SCALE
BAR IS ONE INCH ON ORIGINAL DRAWING.
0 1"

DATE	2017-03-31
PROJ	665163
DWG	CS-011
SHEET	82 of 91

BID READY

REUSE OF DOCUMENTS: THIS DOCUMENT, AND THE IDEAS AND DESIGNS INCORPORATED HEREIN, AS AN INSTRUMENT OF PROFESSIONAL SERVICE, IS THE PROPERTY OF CH2M HILL AND IS NOT TO BE USED, IN WHOLE OR IN PART, FOR ANY OTHER PROJECT WITHOUT THE WRITTEN AUTHORIZATION OF CH2M HILL.
©CH2M HILL 2015. ALL RIGHTS RESERVED.

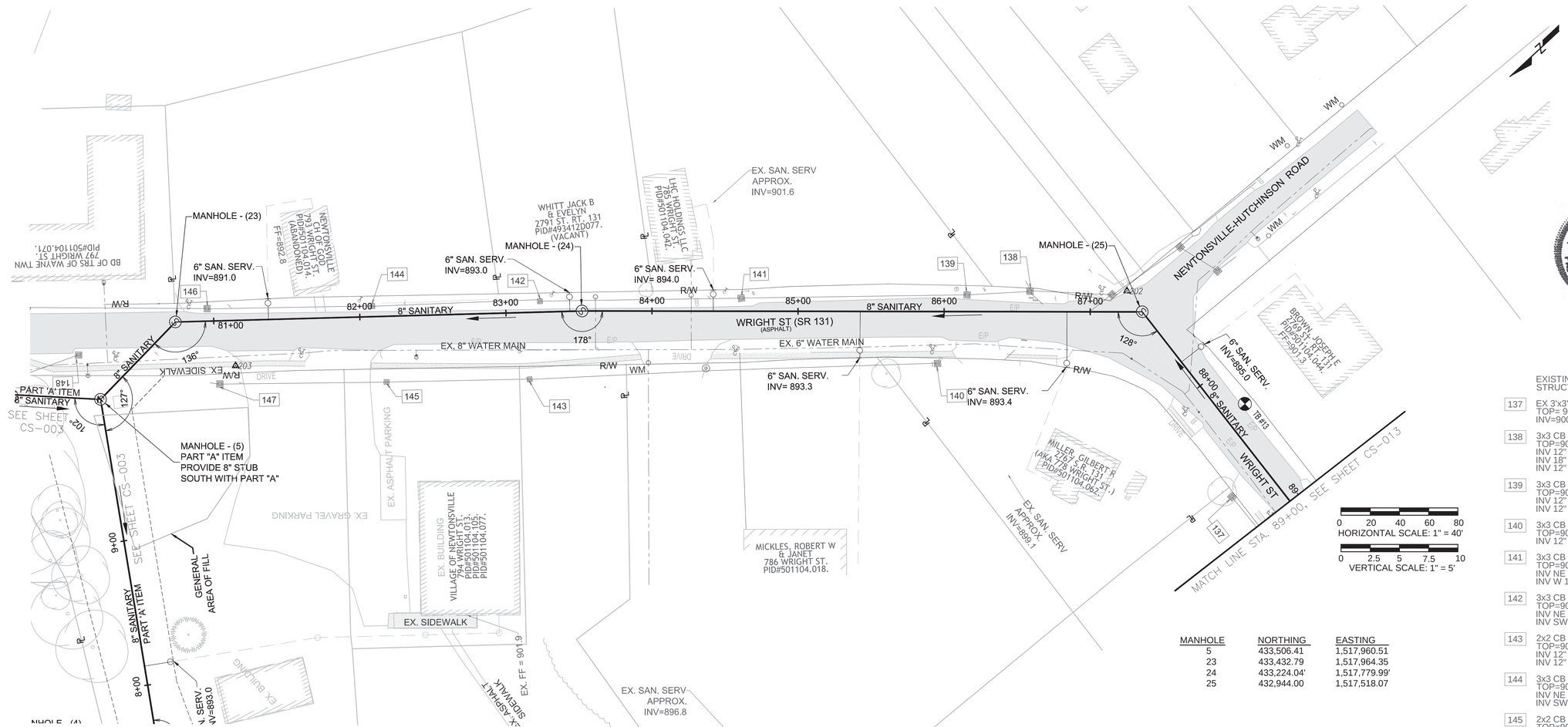

MANHOLE	NORTHING	EASTING
5	433,506.41	1,517,960.51
23	433,432.79	1,517,964.35
24	433,224.04'	1,517,779.99'
25	432,944.00	1,517,518.07

EXISTING STORM STRUCTURES

137 EX 3'x3' CB TOP= 902.85 INV=900.98

138 3x3 CB TOP=901.74 INV 12" CPP=899.59 INV 18" RCP=899.73 INV 12" SW=899.64

139 3x3 CB TOP=902.58 INV 12" CPP=902.58 INV 12" SW=899.44

140 3x3 CB TOP=902.22 INV 12" CPP=899.62

141 3x3 CB TOP=901.72 INV NE 12" CPP=897.30 INV W 12" CPP=897.38

142 3x3 CB TOP=901.68 INV NE 12" CPP=896.34 INV SW 12" CPP=896.91

143 2x2 CB TOP=900.67 INV 12" CPP=896.76 INV 12" CPP=896.74

144 3x3 CB TOP=900.65 INV NE 12" CPP=896.34 INV SW 12" CPP=896.37

145 2x2 CB TOP=900.900.39 INV NE 12" CPP=896.29 INV SW 12" CPP=896.22

146 3x3 CB TOP=896.48 INV NE 15" CPP=893.65 INV SW 15" CPP=893.62

147 2x2 CB TOP=896.09 INV NE 12" CPP=892.32 INV SW 12" CPP=892.33

148 3x3 CB TOP=893.98 INV 12" CPP=891.69

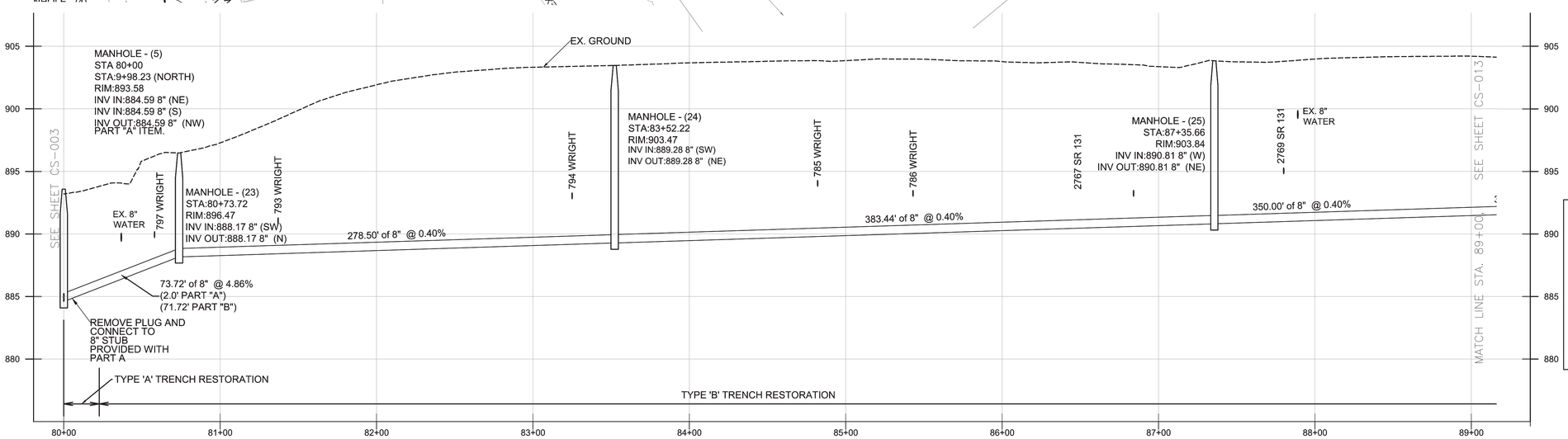

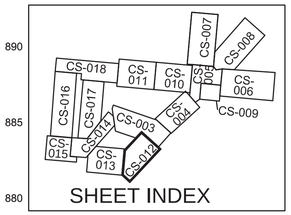

SHEET INDEX

NO.	DATE	DR	REVISION	CHK	APVD	BY	APVD
DSGN	D. MARTIN	E. HAMMONS		D. MARTIN	D. MARTIN		D. MARTIN

VILLAGE OF NEWTONSVILLE
WASTEWATER TREATMENT PLANT & COLLECTION SYSTEM - PART B
CLERMONT COUNTY WATER RESOURCES DEPARTMENT, CLERMONT COUNTY, OHIO

CONVEYANCE

WRIGHT STREET STA. 80+00 TO 89+00

1"=40'

VERIFY SCALE

BAR IS ONE INCH ON ORIGINAL DRAWING. 0 1"

DATE	2017-03-31
PROJ	665163
DWG	CS-012
SHEET	83 of 91

BID READY

©CH2M HILL 2015 ALL RIGHTS RESERVED.
REUSE OF DOCUMENTS: THIS DOCUMENT, AND THE IDEAS AND DESIGNS INCORPORATED HEREIN, AS AN INSTRUMENT OF PROFESSIONAL SERVICE, IS THE PROPERTY OF CH2M HILL AND IS NOT TO BE USED, IN WHOLE OR IN PART, FOR ANY OTHER PROJECT WITHOUT THE WRITTEN AUTHORIZATION OF CH2M HILL.

MANHOLE	NORTHING	EASTING
26	432,974.94	1,517,169.44
27	433,011.27	1,516,793.64

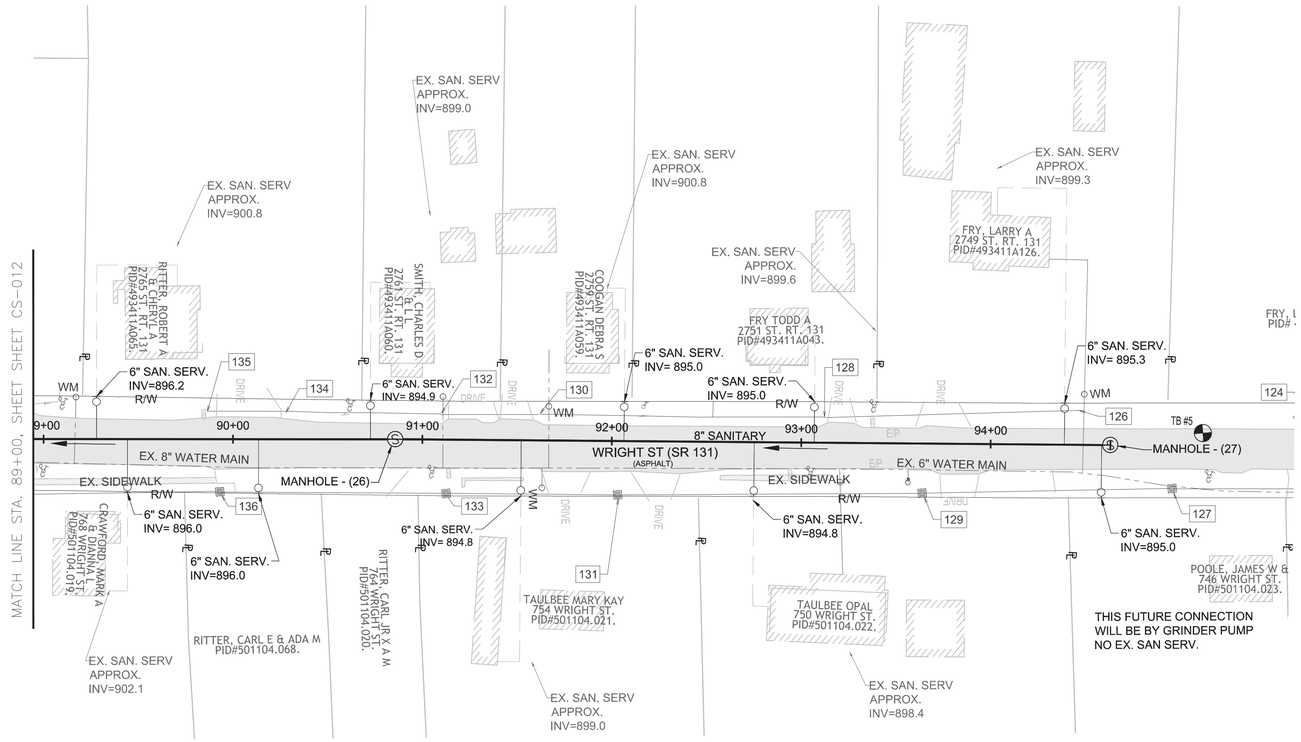

EXISTING STORM STRUCTURES

126	12" RCP STM INV=895.72
127	EX 3'x3' CB TOP= 898.19 INV W 15" CPP=895.72 INV E 15" CPP=895.79
128	12" RCP STM INV=898.44
129	EX 3'x3' CB TOP= 899.02 INV E 15" CPP=896.61 INV W 15" CPP=896.55
130	12" CPP STM TOP=900.82
131	EX 3'x3' CB TOP= 900.59 INV E 12" CPP=897.73 INV W 12" CPP=897.74
132	15" CPP STM TOP=900.40
133	EX 3'x3' CB TOP= 901.30 INV W=898.59 INV E=898.60
134	12" CPP STM TOP=900.40
135	12" CPP STM TOP=901.70
136	136 EX 3'x3' CB TOP= 902.51 INV E=899.79 INV W=899.79

0 20 40 60 80
HORIZONTAL SCALE: 1" = 40'
0 2.5 5 7.5 10
VERTICAL SCALE: 1" = 5'

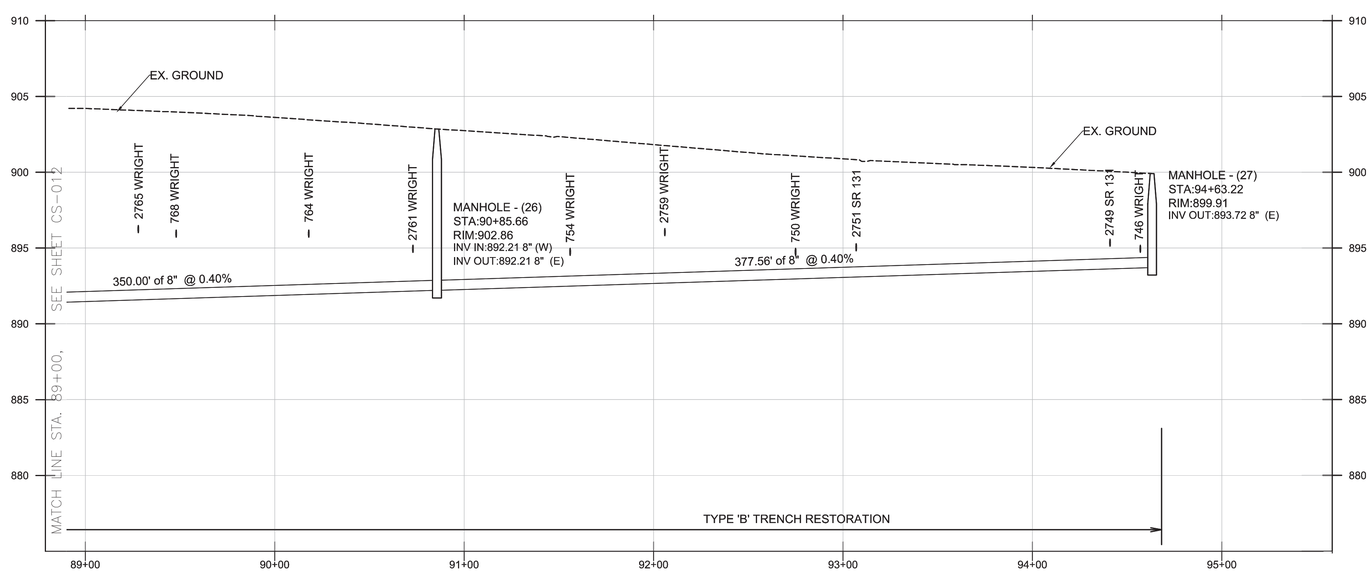

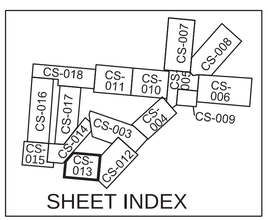

NO.	DATE	DR	REVISION	BY	APVD
DSGN	D. MARTIN	E. HAMMONS	CHK	D. MARTIN	APVD

D. MARTIN

Clermont County

VILLAGE OF NEWTONSVILLE
WASTEWATER TREATMENT PLANT & COLLECTION SYSTEM - PART B
CLERMONT COUNTY WATER RESOURCES DEPARTMENT, CLERMONT COUNTY, OHIO

ch2m: Consultants, LLC Engineers and Surveyors

CONVEYANCE

WRIGHT STREET
STA. 89+00 TO 94+63

1"=40'
VERIFY SCALE
BAR IS ONE INCH ON ORIGINAL DRAWING.
0 1"

DATE	2017-03-31
PROJ	665163
DWG	CS-013
SHEET	84 of 91

BID READY

©CH2M HILL 2015 ALL RIGHTS RESERVED.
REUSE OF DOCUMENTS: THIS DOCUMENT, AND THE IDEAS AND DESIGNS INCORPORATED HEREIN, AS AN INSTRUMENT OF PROFESSIONAL SERVICE, IS THE PROPERTY OF CH2M HILL AND IS NOT TO BE USED, IN WHOLE OR IN PART, FOR ANY OTHER PROJECT WITHOUT THE WRITTEN AUTHORIZATION OF CH2M HILL.

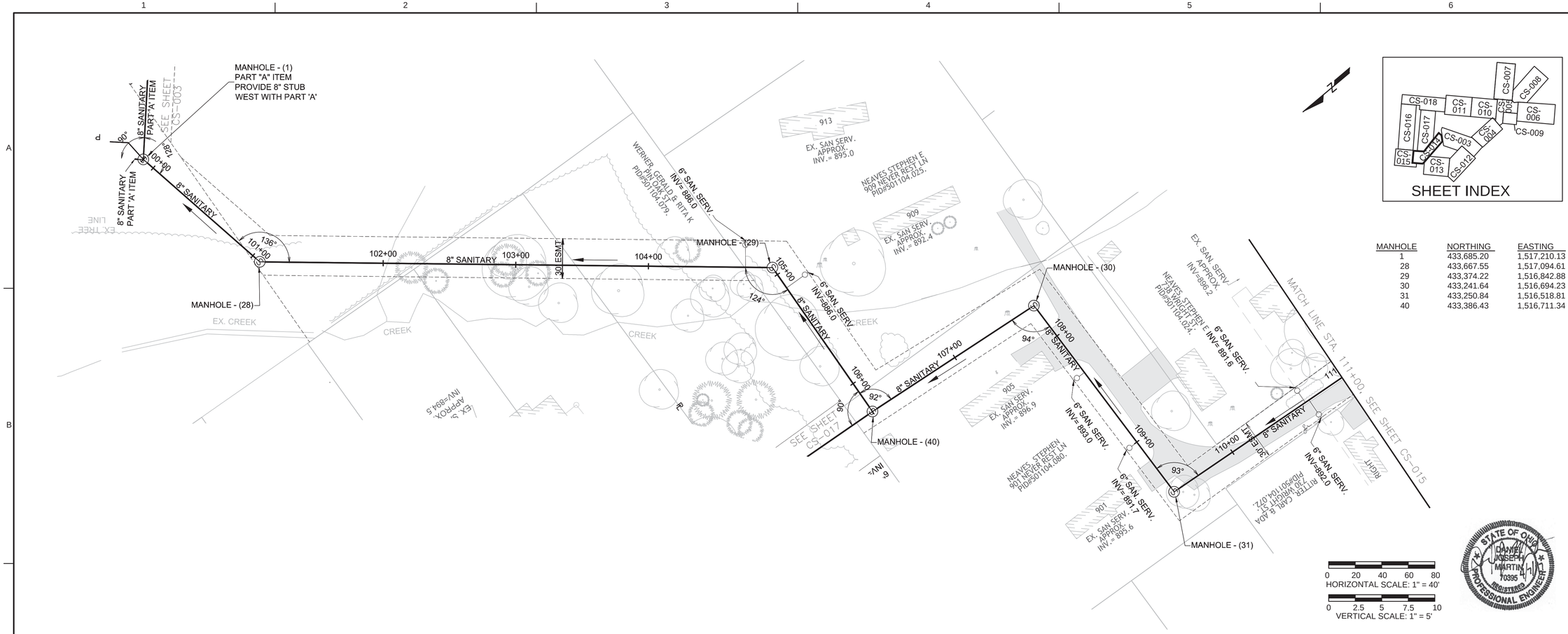

MANHOLE	NORTHING	EASTING
1	433,685.20	1,517,210.13
28	433,667.55	1,517,094.61
29	433,374.22	1,516,842.88
30	433,241.64	1,516,694.23
31	433,250.84	1,516,518.81
40	433,386.43	1,516,711.34

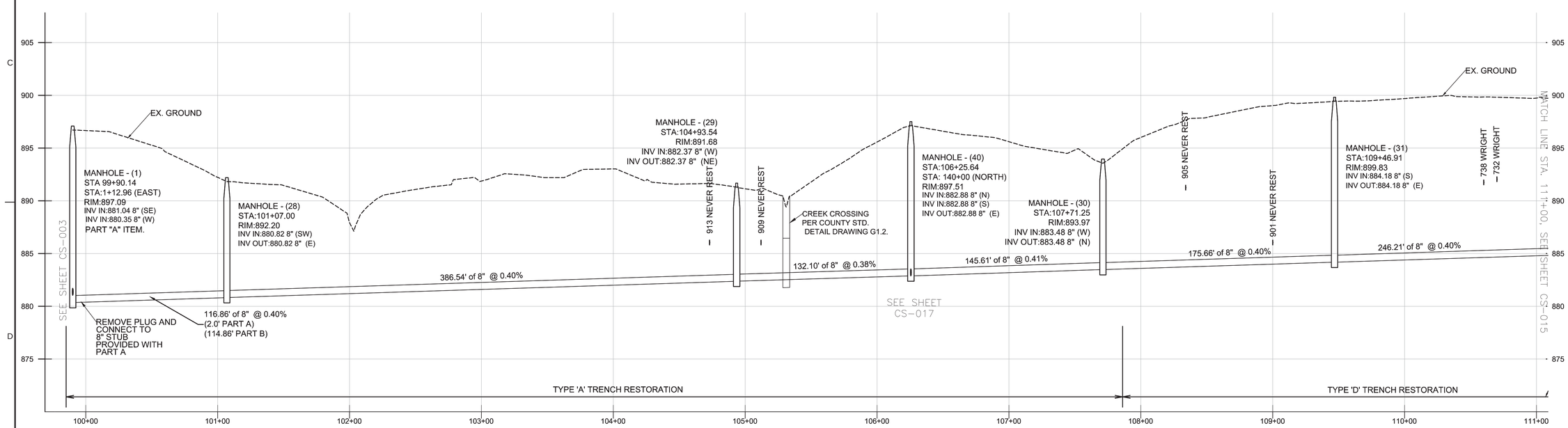

NO.	DATE	REVISION	BY	APVD
DSGN	D. MARTIN	DR E. HAMMONS	CHK D. MARTIN	APVD D. MARTIN

VILLAGE OF NEWTONSVILLE
WASTEWATER TREATMENT PLANT & COLLECTION SYSTEM - PART B
CLERMONT COUNTY WATER RESOURCES DEPARTMENT, CLERMONT COUNTY, OHIO

Clermont County

ch2m

RA Consultants, LLC Engineers and Surveyors

CONVEYANCE

PARK LAND AND PRIVATE LANDS STA. 99+90 TO 111+00

1"=40'

VERIFY SCALE

BAR IS ONE INCH ON ORIGINAL DRAWING.
0 1"

DATE	2017-03-31
PROJ	665163
DWG	CS-014
SHEET	85 of 91

BID READY

REUSE OF DOCUMENTS: THIS DOCUMENT, AND THE IDEAS AND DESIGNS INCORPORATED HEREIN, AS AN INSTRUMENT OF PROFESSIONAL SERVICE, IS THE PROPERTY OF CH2M HILL AND IS NOT TO BE USED, IN WHOLE OR IN PART, FOR ANY OTHER PROJECT WITHOUT THE WRITTEN AUTHORIZATION OF CH2M HILL.

©CH2M HILL 2015. ALL RIGHTS RESERVED.

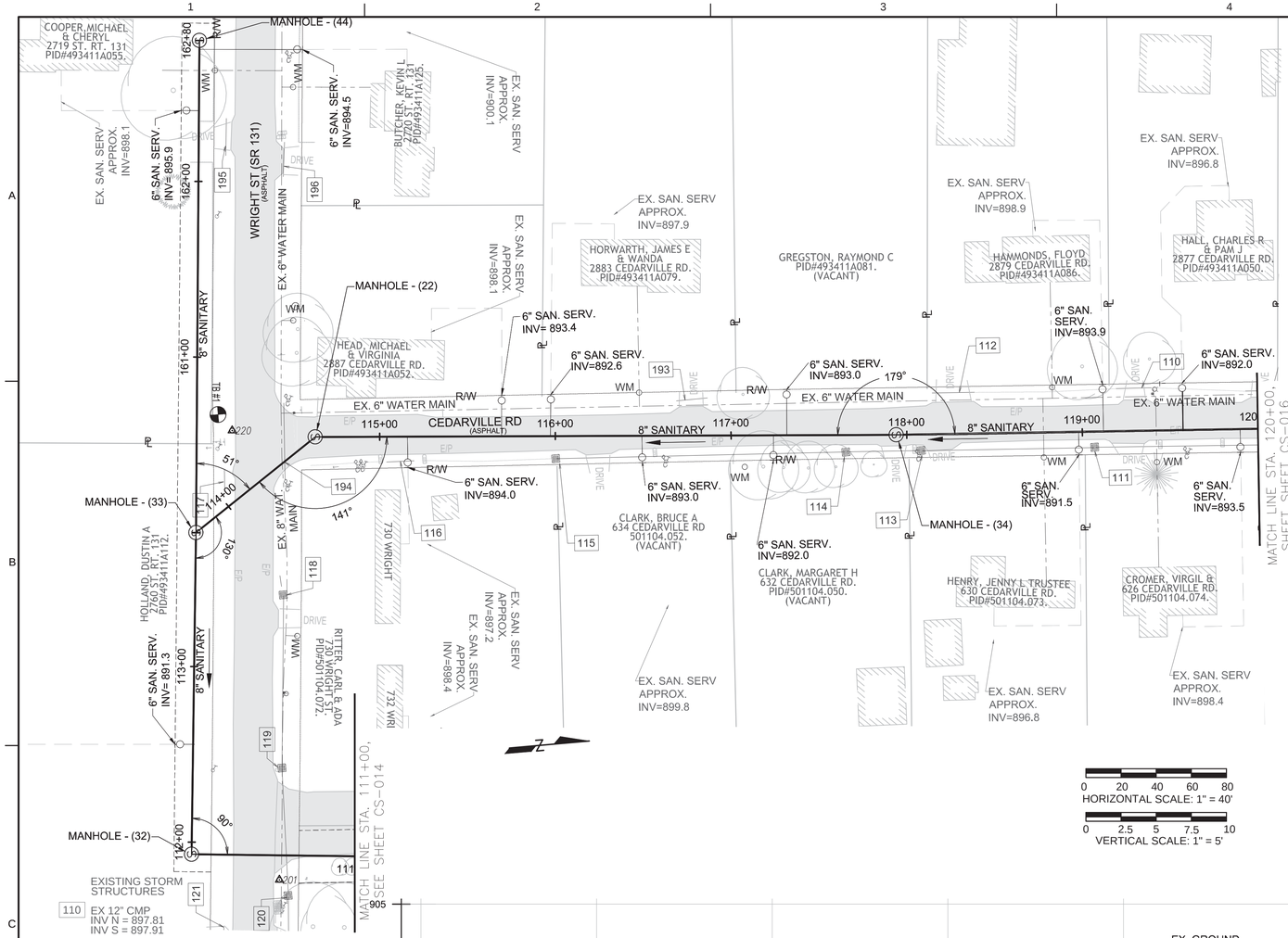

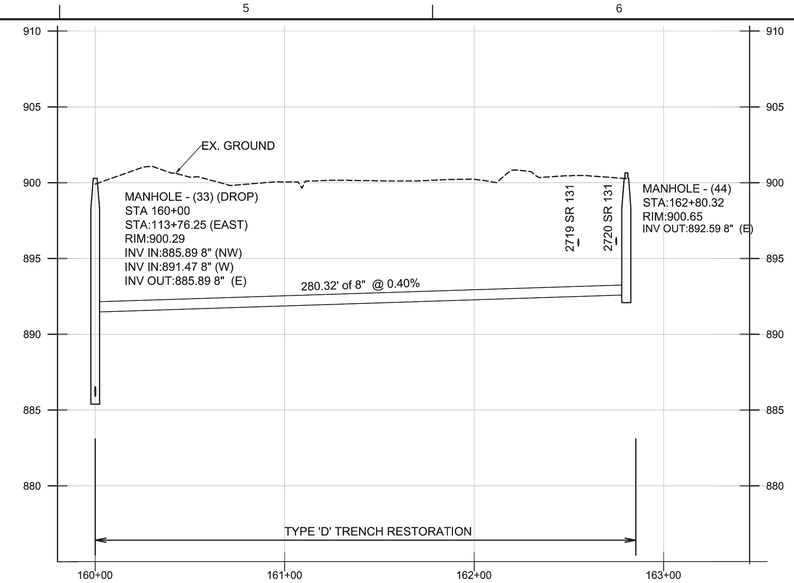

MANHOLE	NORTHING	EASTING
32	433,005.87	1,516,494.11
33	433,024.50	1,516,311.93
34	433,426.49	1,516,291.53
44	4.33,051.14	1,516,032.88
22	433,096.93	1,516,263.62

0 20 40 60 80
HORIZONTAL SCALE: 1" = 40'
0 2.5 5 7.5 10
VERTICAL SCALE: 1" = 5'

STATE OF OHIO DANIEL JOSEPH MARTIN 70395 REGISTERED PROFESSIONAL ENGINEER

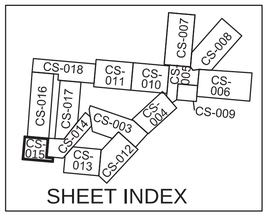

SHEET INDEX

EXISTING STORM STRUCTURES

110 EX 12" CMP
INV N = 897.81
INV S = 897.91

111 EX. 3x3 CB
TOP=898.39
12" CPP INV S=895.33
12" CPP INV N=895.27

112 EX 12" CMP
INV N = 897.67
INV S = 897.78

113 EX. 3x3 CB
TOP=898.76
12" CPP INV N=898.76
12" CPP INV S=895.79

114 EX 3'x3' CBTOP= 898.18
12" N. INV=895.76
12" S. INV=895.87

115 EX 3'x3' CBTOP= 898.60
INV=896.52

116 12" CMP STM
TOP S=899.88
TOP N=899.75

117 24" RCP Stm
TOP E=900.38
TOP W=900.13

118 EX 3'x3' CB
TOP= 899.26
INV=897.19

119 EX 3'x3' CB
TOP= 899.21
INV=896.57
INV=896.58

120 EX 3'x3' CB
TOP= 898.45
INV=896.05
INV=896.08

194 15" CMP
TOP E=898.98
TOP W=898.44

195 12" RCP
TOP E = 899.96
TOP W = 900.48

196 12" RCP
TOP E = 900.49
TOP W = 900.43

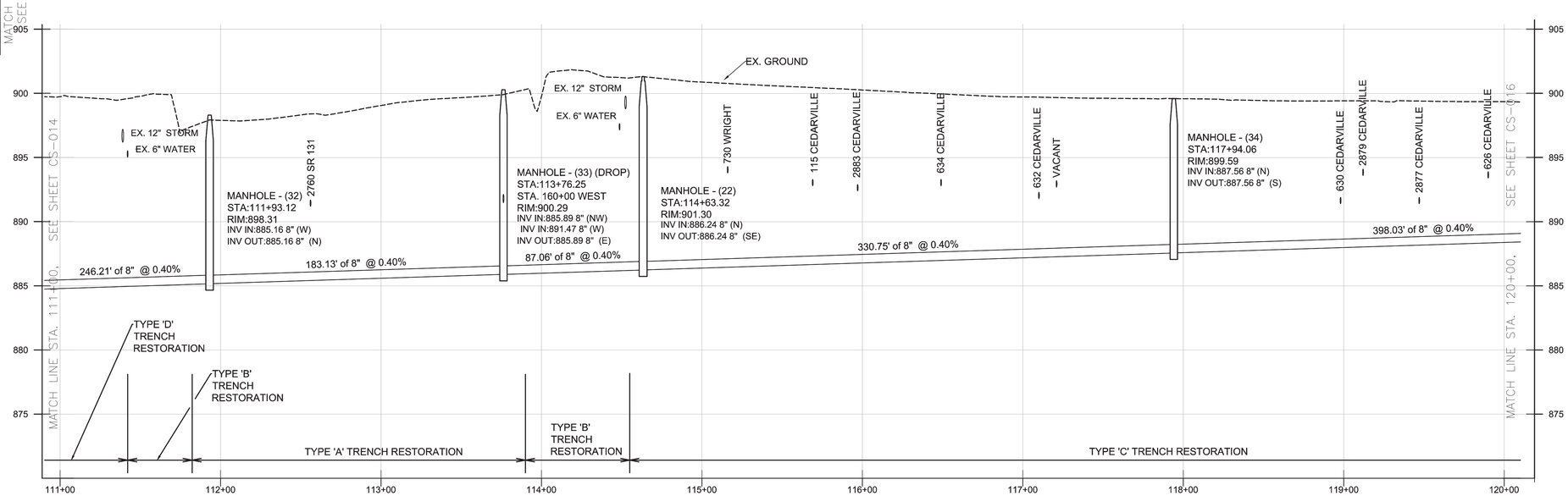

NO.	DATE	DR	REVISION	CHK	APVD	BY	APVD
DSGN	D. MARTIN	E. HAMMONS		D. MARTIN	D. MARTIN		D. MARTIN

VILLAGE OF NEWTONSVILLE
WASTEWATER TREATMENT PLANT & COLLECTION SYSTEM - PART B
CLERMONT COUNTY WATER RESOURCES DEPARTMENT, CLERMONT COUNTY, OHIO

Clermont County

ch2m

RA Consultants LLC Engineers and Surveyors www.RAConsultants.com

CONVEYANCE

WRIGHT ST. & CEDARVILLE RD. STA. 111+00 TO 120+00

1"=40'

VERIFY SCALE
BAR IS ONE INCH ON ORIGINAL DRAWING.
0 1"

DATE	2017-03-31
PROJ	665163
DWG	CS-015
SHEET	86 of 91

BID READY

REUSE OF DOCUMENTS: THIS DOCUMENT, AND THE IDEAS AND DESIGNS INCORPORATED HEREIN, AS AN INSTRUMENT OF PROFESSIONAL SERVICE, IS THE PROPERTY OF CH2M HILL AND IS NOT TO BE USED, IN WHOLE OR IN PART, FOR ANY OTHER PROJECT WITHOUT THE WRITTEN AUTHORIZATION OF CH2M HILL.

©CH2M HILL 2015. ALL RIGHTS RESERVED.

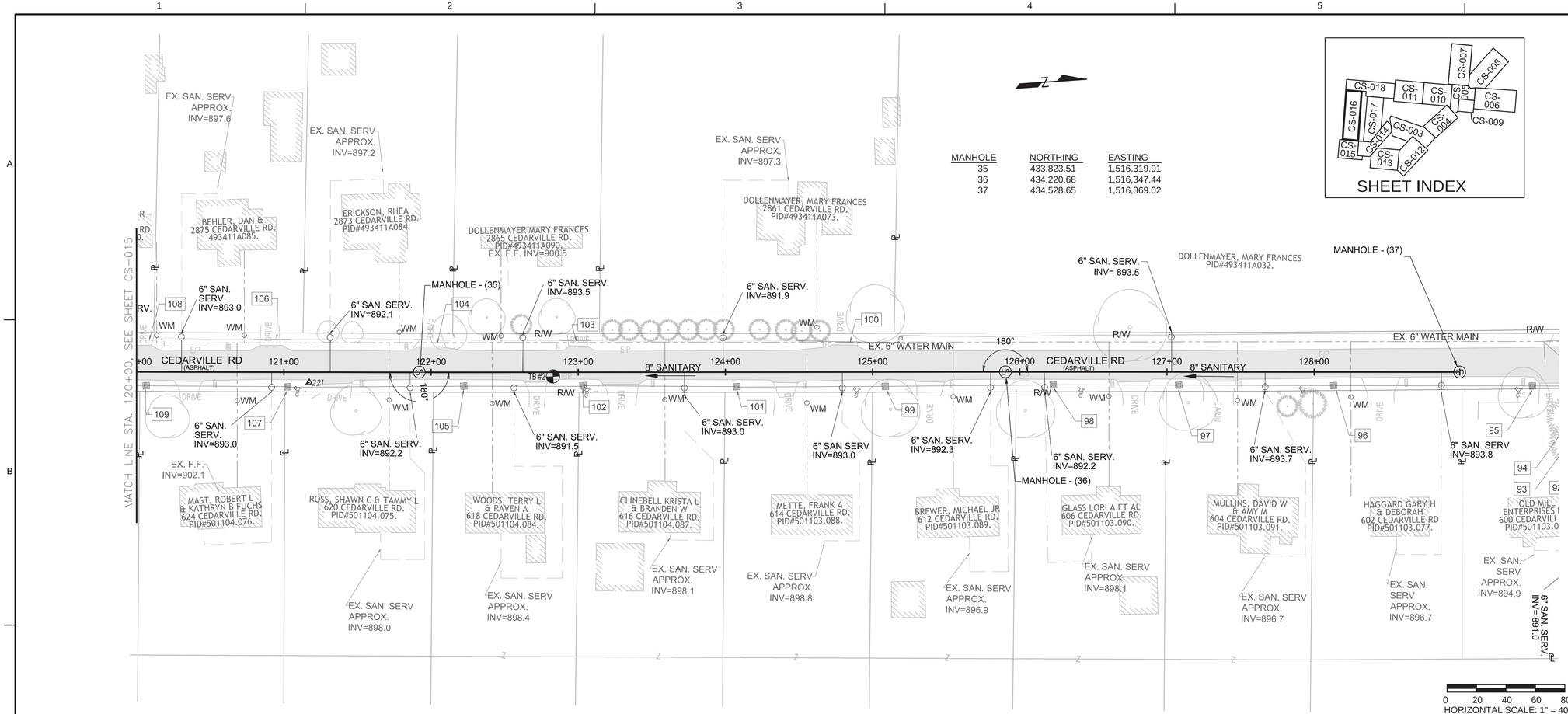

MANHOLE	NORTHING	EASTING
35	433,823.51	1,516,319.91
36	434,220.68	1,516,347.44
37	434,528.65	1,516,369.02

EXISTING STORM STRUCTURES

95	EX. 3x3 CB TOP=896.78 15" CPP INV N=890.96 15" CPP INV S=891.12
96	EX. 3x3 CB TOP=896.74 15" CPP INV N=891.88 15" CPP INV S=891.90
97	EX. 3x3 CB TOP=896.62 15" CPP INV N=892.31 15" CPP INV S=892.38
98	EX. 3x3 CB TOP=897.07 15" CPP INV N=892.72 15" CPP INV S=892.74
99	EX. 3x3 CB TOP=896.22 15" CPP INV N=893.13 15" CPP INV S=893.20
100	EX 15" PVC N INV= 896.00 S INV= 896.21
101	EX. 3x3 CB TOP=895.81 15" CPP INV N=893.56 15" CPP INV S=893.54
102	EX. 3x3 CB TOP=896.92 12" CPP INV N=893.82 12" CPP INV S=893.68
103	EX 15" PVC N INV= 896.00 S INV= 896.21
104	EX 12" CMP N INV=896.42 S INV=896.29
105	EX. 3x3 CB TOP=897.68 12" CPP INV N=896.42 12" CPP INV S=894.05
106	EX 12" CMP INV N =897.22 INV S =897.50
107	EX. 3x3 CB TOP=897.02 12" CPP INV N=894.62 12" CPP INV S=894.65
108	EX 12" CMP INV N =897.36 INV S =897.50
109	EX. 3x3 CB TOP=898.06 12" CPP INV N=894.98 12" CPP INV S=894.94

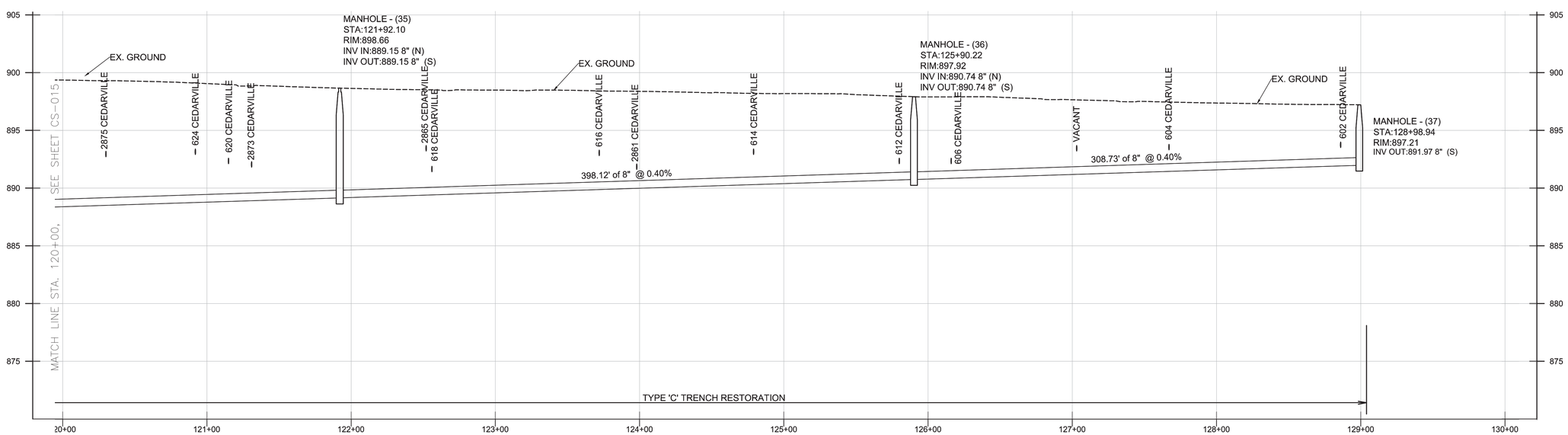

NO.	DATE	REVISION	BY	APVD
DSGN	D. MARTIN	DR E. HAMMONS	CHK D. MARTIN	APVD D. MARTIN

VILLAGE OF NEWTONSVILLE
WASTEWATER TREATMENT PLANT & COLLECTION SYSTEM - PART B
CLERMONT COUNTY WATER RESOURCES DEPARTMENT, CLERMONT COUNTY, OHIO

Clermont County

ch2m

Consultants, LLC Engineers and Surveyors

CONVEYANCE

CEDARVILLE ROAD
STA. 120+00 TO 128+99

1"=40'

VERIFY SCALE

BAR IS ONE INCH ON ORIGINAL DRAWING.
0 1"

DATE	2017-03-31
PROJ	665163
DWG	CS-016
SHEET	87 of 91

BID READY

REUSE OF DOCUMENTS: THIS DOCUMENT, AND THE IDEAS AND DESIGNS INCORPORATED HEREIN, AS AN INSTRUMENT OF PROFESSIONAL SERVICE, IS THE PROPERTY OF CH2M HILL AND IS NOT TO BE USED, IN WHOLE OR IN PART, FOR ANY OTHER PROJECT WITHOUT THE WRITTEN AUTHORIZATION OF CH2M HILL.

©CH2M HILL 2015. ALL RIGHTS RESERVED.

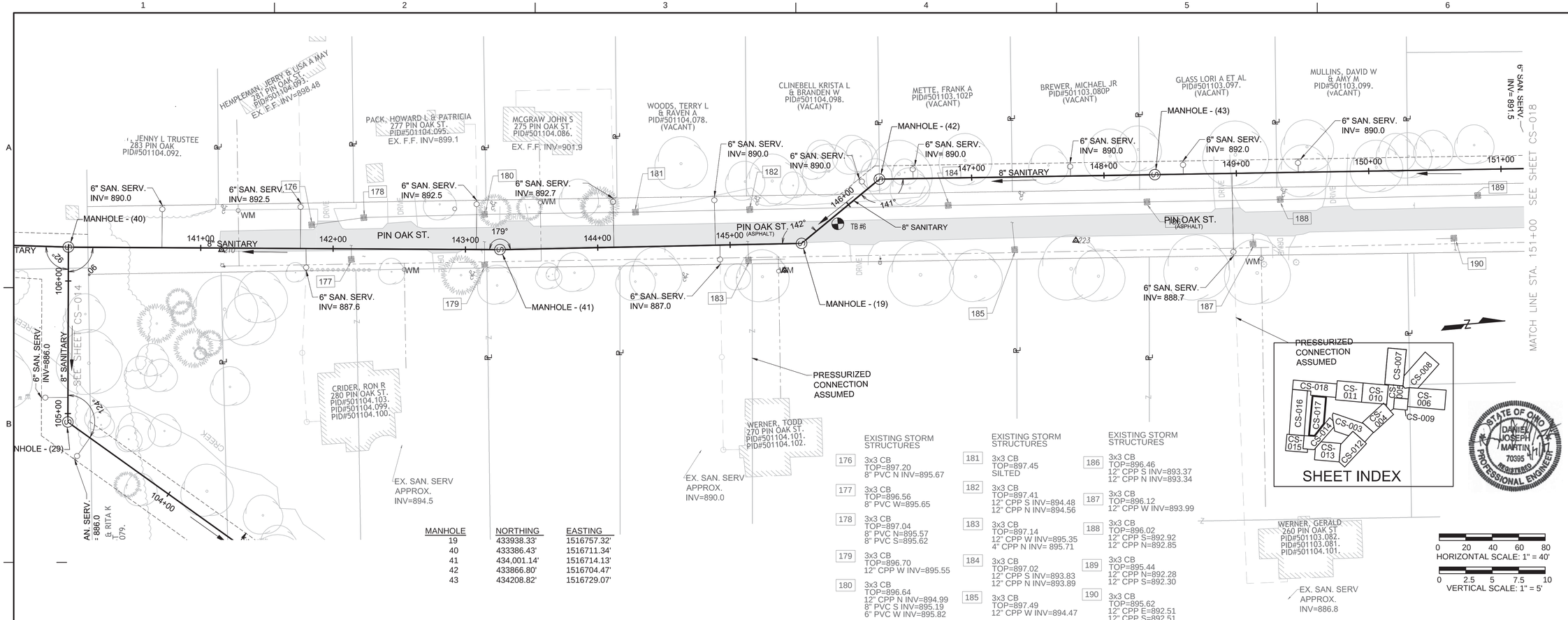

MANHOLE	NORTHING	EASTING
19	433938.33'	1516757.32'
40	433386.43'	1516711.34'
41	434,001.14'	1516714.13'
42	433866.80'	1516704.47'
43	434208.82'	1516729.07'

EXISTING STORM STRUCTURES

176	3x3 CB TOP=897.20 8" PVC N INV=895.67
177	3x3 CB TOP=896.56 8" PVC W=895.65
178	3x3 CB TOP=897.04 8" PVC N=895.57 8" PVC S=895.62
179	3x3 CB TOP=896.70 12" CPP W INV=895.55
180	3x3 CB TOP=896.64 12" CPP N INV=894.99 8" PVC S INV=895.19 6" PVC W INV=895.82
181	3x3 CB TOP=897.45 SILTED
182	3x3 CB TOP=897.41 12" CPP S INV=894.48 12" CPP N INV=894.56
183	3x3 CB TOP=897.14 12" CPP W INV=895.35 4" CPP N INV= 895.71
184	3x3 CB TOP=897.02 12" CPP S INV=893.83 12" CPP N INV=893.89
185	3x3 CB TOP=897.49 12" CPP W INV=894.47
186	3x3 CB TOP=896.46 12" CPP S INV=893.37 12" CPP N INV=893.34
187	3x3 CB TOP=896.12 12" CPP W INV=893.99
188	3x3 CB TOP=896.02 12" CPP S=892.92 12" CPP N=892.85
189	3x3 CB TOP=895.44 12" CPP N=892.28 12" CPP S=892.30
190	3x3 CB TOP=895.62 12" CPP E=892.51 12" CPP S=892.51

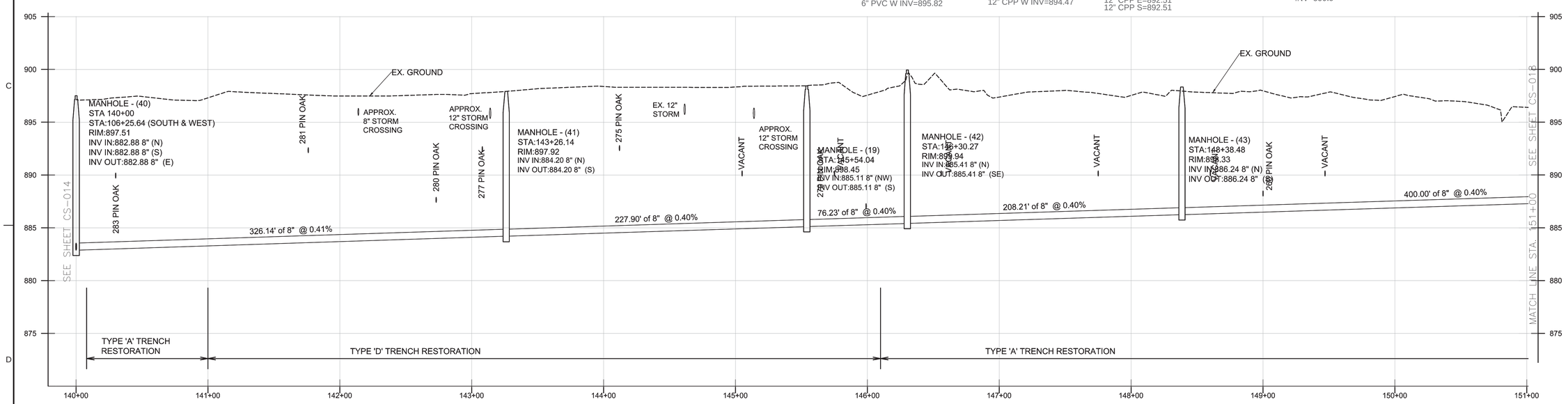

NO.	DATE	REVISION	BY	APVD
DSGN	D. MARTIN	DR E. HAMMONS	CHK D. MARTIN	APVD D. MARTIN

Clermont County

VILLAGE OF NEWTONSVILLE
WASTEWATER TREATMENT PLANT & COLLECTION SYSTEM - PART B
CLERMONT COUNTY WATER RESOURCES DEPARTMENT, CLERMONT COUNTY, OHIO

RA Consultants, LLC Engineers and Surveyors

ch2m

CONVEYANCE

ACCESS DRIVE
STA. 140+00 TO 151+00

1"=40'

VERIFY SCALE

BAR IS ONE INCH ON ORIGINAL DRAWING.
0 1"

DATE	2017-03-31
PROJ	665163
DWG	CS-017
SHEET	88 of 91

BID READY

REUSE OF DOCUMENTS: THIS DOCUMENT, AND THE IDEAS AND DESIGNS INCORPORATED HEREIN, AS AN INSTRUMENT OF PROFESSIONAL SERVICE, IS THE PROPERTY OF CH2M HILL AND IS NOT TO BE USED, IN WHOLE OR IN PART, FOR ANY OTHER PROJECT WITHOUT THE WRITTEN AUTHORIZATION OF CH2M HILL.
©CH2M HILL 2015. ALL RIGHTS RESERVED.

EXISTING STORM STRUCTURES

81 2x2 CB
TOP=887.59
INV E 18" CPP=883.56
INV W 18" CPP=883.70

82 CATCH BASIN
TOP=891.03
12" RCP W INV=889.70
12" RCP E INV=889.58

83 12" CMP
INV W = 893.50
INV E = 891.87

84 2x2 CB
TOP=894.39
INV W 18" CPP=889.50
INV E 18" CPP=889.47
INV SW 6" CPP=893.68

85 12" RCP
INV E=894.36
INV W=894.36

86 3x3 CB
TOP=895.25
18" RCP INV W=891.06
18" RCP INV E=891.11
12" CPP INV S=891.48

87 3x3 CB
TOP=895.51
18" RCP INV W=891.38
18" RCP INV E=891.35
12" CPP INV S=891.51

88 12" CMP
INV W=895.51
INV E=895.43

89 3x3 CB
TOP=896.10
18" RCP INV W=892.88
18" RCP INV E=892.84
12" CPP INV S=892.95

90 12" RCP
INV E=895.72
INV W=895.90

91 12" RCP
INV N=895.20
INV S=895.31

92 3x3 CB
TOP=896.64
18" RCP INV W=893.83
18" RCP INV E=893.78

93 EX. 3x3 CB
TOP=896.64
18" CPP INV W=893.83
18" CPP INV E=893.78

94 STORM MH
TOP=896.80

95 EX. 3x3 CB
TOP=895.79
15" CPP INV N=890.96
15" CPP INV S=891.12

96 EX. 3x3 CB
TOP=896.75
15" CPP INV N=891.88
15" CPP INV S=891.90

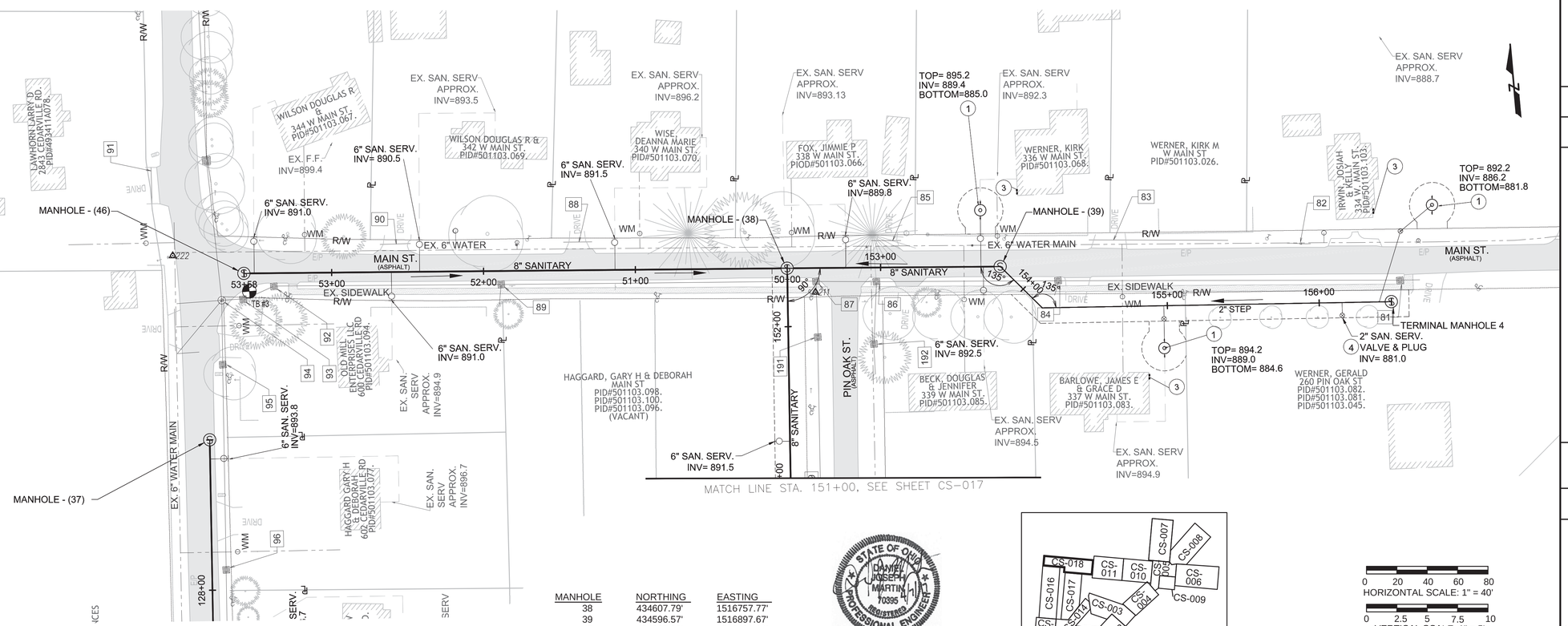

MANHOLE	NORTHING	EASTING
38	434607.79'	1516757.77'
39	434596.57'	1516897.67'
47	434635.89'	1516401.14'
TERMINAL 4	434550.85'	1517152.19'

STATE OF OHIO DANIEL JOSEPH MARTIN 70395 REGISTERED PROFESSIONAL ENGINEER

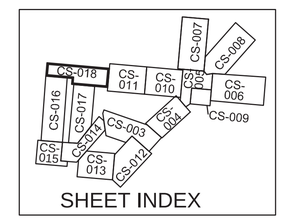

SHEET INDEX

0 20 40 60 80
HORIZONTAL SCALE: 1" = 40'
0 2.5 5 7.5 10
VERTICAL SCALE: 1" = 5'

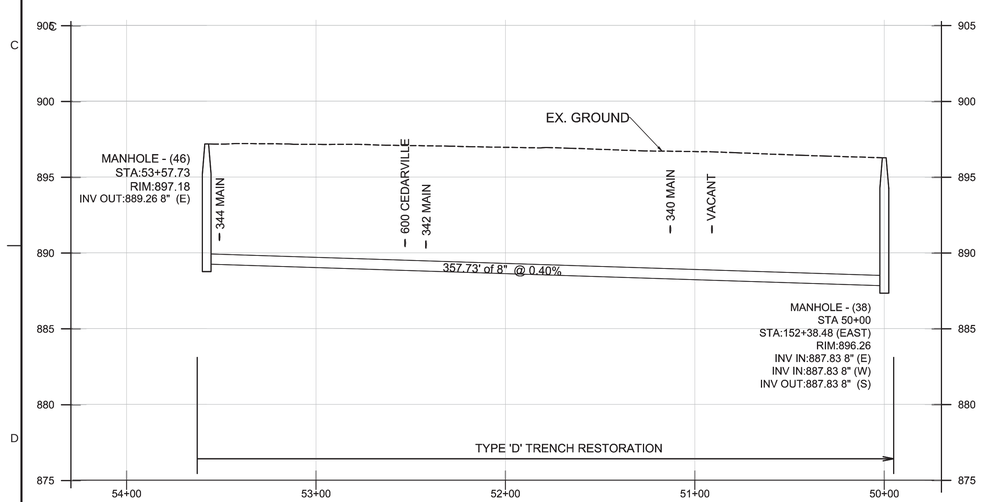

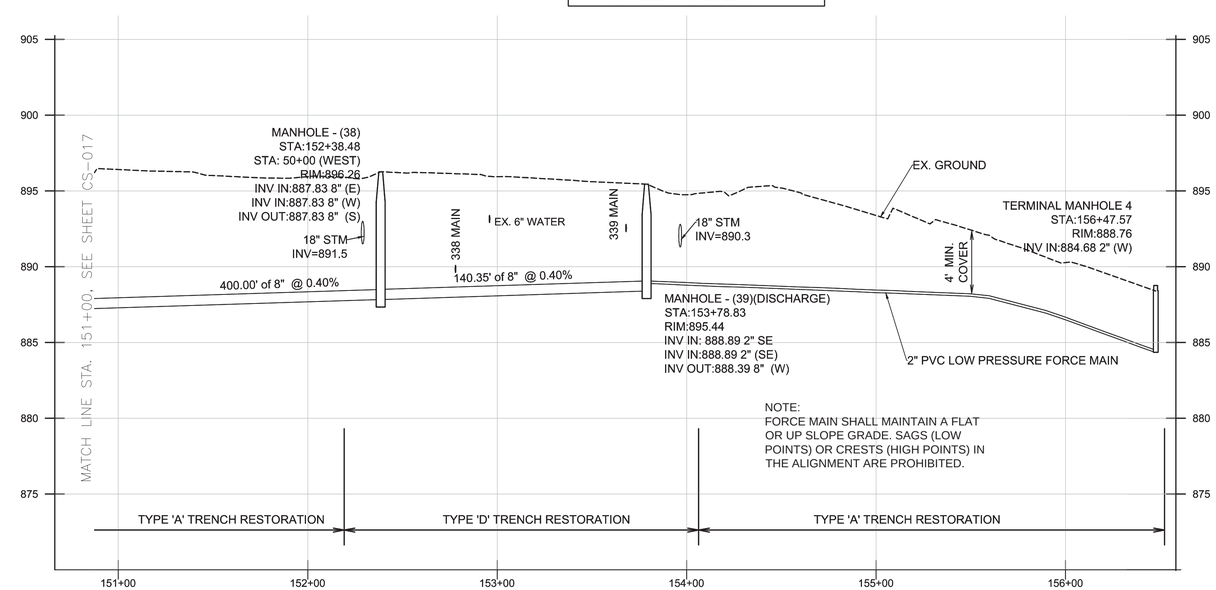

NO.	DATE	DR	REVISION	CHK	APVD	BY	APVD
DSGN	D. MARTIN	E. HAMMONS		D. MARTIN	D. MARTIN		D. MARTIN

©CH2M HILL 2015 ALL RIGHTS RESERVED.

REUSE OF DOCUMENTS: THIS DOCUMENT, AND THE IDEAS AND DESIGNS INCORPORATED HEREIN, AS AN INSTRUMENT OF PROFESSIONAL SERVICE, IS THE PROPERTY OF CH2M HILL AND IS NOT TO BE USED, IN WHOLE OR IN PART, FOR ANY OTHER PROJECT WITHOUT THE WRITTEN AUTHORIZATION OF CH2M HILL.

Clermont County

VILLAGE OF NEWTONSVILLE
WASTEWATER TREATMENT PLANT & COLLECTION SYSTEM - PART B
CLERMONT COUNTY WATER RESOURCES DEPARTMENT, CLERMONT COUNTY, OHIO

RA Consultants, LLC Engineers and Surveyors

ch2m

CONVEYANCE
MAIN STREET
STA. 50+00 TO 53+58,
STA. 151+00 TO 156+48

1"=40'
VERIFY SCALE
BAR IS ONE INCH ON ORIGINAL DRAWING.
0 1"

DATE	2017-03-31
PROJ	665163
DWG	CS-018
SHEET	89 of 91

BID READY

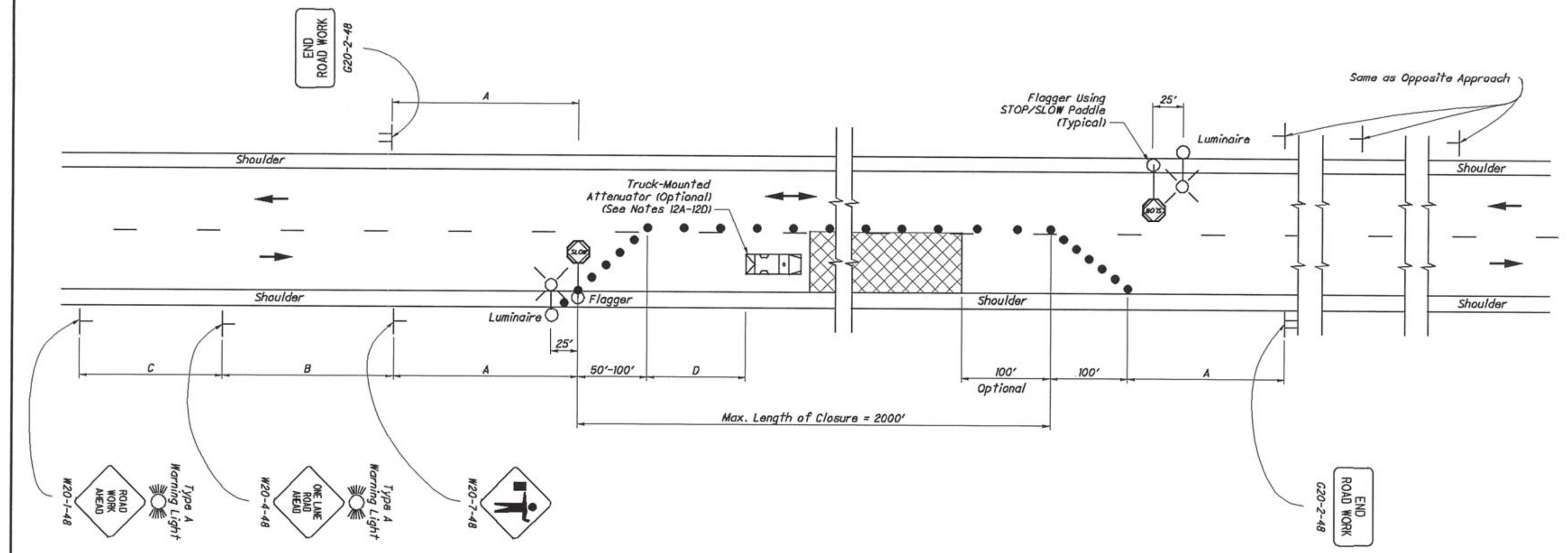

TABLE I (SIGN SPACING)

ROAD TYPE	DISTANCE BETWEEN SIGNS (FT)		
	A	B	C
Two-Lane (≤ 40 MPH)	100	100	100
Two-Lane (45-50 MPH)	350	350	350
Two-Lane (55-60 MPH)	500	500	500

TABLE II

SPEED LIMIT (MPH)	BUFFER (D) (FT) MIN.
25	155
30	200
35	250
40	305
45	360
50	425
55	495
60	570

LEGEND

WORK AREA	(hatched)
DRUMS/CONES	● ● ●
DIRECTION OF TRAVEL	→
SHADOW VEHICLE	(symbol)

THIS DRAWING REPLACES MT-97.10 DATED 07-19-2013.

SCD NUMBER MT-97.10 — STANDARD ROADWAY CONSTRUCTION DRAWING — FLAGGER CLOSING 1 LANE OF A 2-LANE HIGHWAY - STATIONARY OPERATION — OFFICE OF ROADWAY ENGINEERING — STDS. ENGINEER Soisson — STATE OF OHIO DEPARTMENT OF TRANSPORTATION — ADMINISTRATOR — DATE 07-18-2014 — 1/2

NOTES:

FLAGGERS

1. Flaggers, one for each direction, shall be used to control traffic continuously for as long as a one lane operation is in effect. The flaggers shall be able to communicate with each other at all times.

LENGTH OF CLOSURE

2. Several small work areas close together should be combined into one work zone. However, the closure shall not be more than 2000' long unless approved by the Engineer. The minimum length between closures shall be 2000'. Only one side of the road shall be closed in any one work zone.

SIGN LOCATION AND SPACING

3A. The minimum spacing between work zone signs is shown in Table I. Maximum spacing should not be greater than 1.5 times the distances shown in Table I.

3B. Sign spacing should be adjusted to avoid conflict with existing signs. Minimum spacing to existing signs shall be 200' for speeds of 45 mph or less and a minimum of 400' for speeds of 50 mph or greater.

3C. The location of the advance warning signs should be adjusted to provide for adequate sight distance for the existing vertical and horizontal roadway alignment.

ADJUSTMENTS FOR SIGHT DISTANCE

4. The location of the flagger station and the advance warning signs should be adjusted to provide for adequate sight distance for the existing vertical and horizontal roadway alignment.

BASIC SIGNING

5A. ROAD WORK AHEAD (W20-1) signs shall be provided on entrance ramps or roadways entering the work limits.

5B. END ROAD WORK (G20-2) signs are only required for lane closures of more than 1 day. It is intended that these signs be placed on the mainline, on all exit ramps, and on roadways exiting the work limits.

5C. Overlapping of signing for adjacent projects should be avoided where the messages could be confusing. Any ROAD WORK AHEAD (W20-1) or END ROAD WORK (G20-2) sign which falls within the limits of another traffic control zone shall be omitted or covered during the period when both projects are active.

SIGNING DETAILS

6A. The Advisory Speed (W13-1P) plaque shall be used when specified in the plan.

6B. 36" warning signs may be used when the approach speed limit is 40 mph or less.

FLASHING WARNING LIGHTS

7. Type A flashing warning lights shown on the ROAD WORK AHEAD (W20-1) signs and on the LANE CLOSED AHEAD (W20-5) signs are required whenever a night lane closure is necessary.

DRUMS / CONES

8A. Drum spacing shall be as follows:

a) Spacing along the closure shall be 40' center-to-center.
b) Spacing along the approach taper shall be 10' center-to-center.

8B. Cones may be substituted for drums as follows:

a) Cones used for daytime traffic control shall have a minimum height of 28".
b) Cones used for nighttime traffic control shall have a minimum height of 42".
c) Use of cones at night shall be prohibited along tapers.

8C. Provisions shall be made to stabilize the cones and drums to prevent them from blowing over.

8D. A minimum of two drums shall be used to close the paved shoulder.

(RESERVED FOR FUTURE USE)

9A. (intentionally blank)

AREA ILLUMINATION

10A. Adequate area illumination of each flagger station shall be provided at night. Use of portable flood lighting is acceptable. Luminaires shall be located adjacent to each flagger station.

10B. To ensure the adequacy of floodlight placement and the elimination of glare, the Contractor and the Engineer shall drive through the worksite each night when the lighting is in place. Light placement and shielding shall be adjusted to the satisfaction of the Engineer.

INTERSECTION / DRIVEWAY ACCESS

11. Within the length of closure, provision shall be made to control traffic entering from intersecting streets and major drives as necessary to prevent wrong-way movements and to keep vehicles off of new pavement not ready for traffic. The Contractor shall:

a) Place across the closed lane, either three drums (cones) or barricades, and/or
b) Provide an additional flagger at every public street intersection and major driveway.

Drums (cones) placed across the closed lane shall be located 25' beyond the projected pavement edges of the driveway or cross highway, as shown in Standard Construction Drawings (SCDs MT-97.11 or MT-97.12. For barricades, see SCD MT-101.60.

Existing STOP signs shall be relocated as necessary to assure proper location for the traffic conditions.

The method of control shall be subject to the approval of the Engineer.

SHADOW VEHICLE

12A. The shadow vehicle shall be in place and unoccupied whenever workers are in the work area. This vehicle shall be removed from the pavement whenver workers are not in the work area.

12B. The shadow vehicle shall be equipped with a high-intensity yellow rotating, flashing, oscillating, or strobe light(s).

12C. The vehicle shall be equipped with a truck-mounted attenuator when called for in the plans.

12D. Other protective devices may be used in lieu of the shadow vehicle shown when approved by the Engineer.

CHIP SEAL OPERATIONS

13. For chip seal operations, additional signing shall be incorporated in the advanced warning area.

a) The LOOSE GRAVEL (W8-7) and FRESH TAR (W21-2) signs shall both be used in advance of the chip seal operation.
b) Repeat the LOOSE GRAVEL sign with a 35 mph Advisory Speed (W13-1) plaque every half mile per CMS 422.09.
c) The FRESH TAR and the LOOSE GRAVEL signs shall both be used for signing of side roads intersecting the work area.

THIS DRAWING REPLACES MT-97.10 DATED 07-19-2013.

SCD NUMBER MT-97.10 — FLAGGER CLOSING 1 LANE OF A 2-LANE HIGHWAY - STATIONARY OPERATION — OFFICE OF ROADWAY ENGINEERING — STDS. ENGINEER Soisson — DATE 07-18-2014 — 2/2

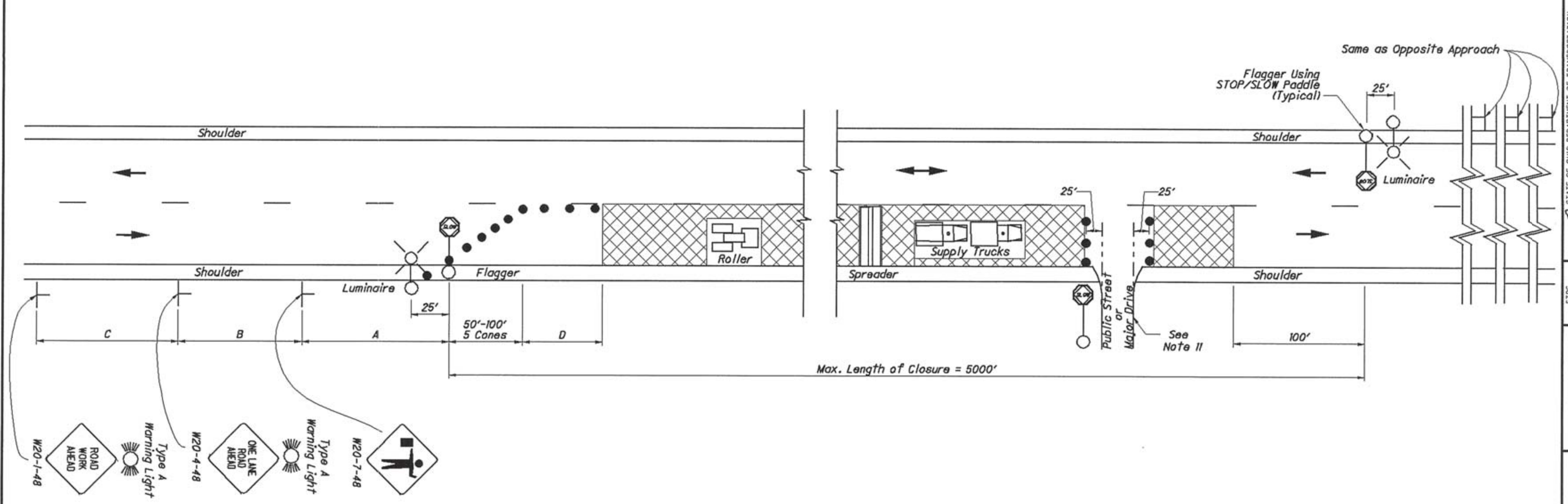

TABLE I (SIGN SPACING)

ROAD TYPE	DISTANCE BETWEEN SIGNS (FT)		
	A	B	C
Two Lane ≤ 40 MPH	100	100	100
Two Lane 45-50 MPH	350	350	350
Two Lane 55-60 MPH	500	500	500

TABLE II

SPEED LIMIT (MPH)	BUFFER (D) (FT) MIN.
25	155
30	200
35	250
40	305
45	360
50	425
55	495
60	570

LEGEND

WORK AREA	(hatched)
CONES	● ● ●
DIRECTION OF TRAVEL	→

THIS DRAWING REPLACES MT-97.11 DATED 07-19-2013.

SCD NUMBER MT-97.11 — STANDARD ROADWAY CONSTRUCTION DRAWING — FLAGGER CLOSING 1 LANE OF A 2-LANE HIGHWAY FOR PAVING OPERATIONS (NON-FED ONLY) — OFFICE OF ROADWAY ENGINEERING — STDS. ENGINEER Soisson — STATE OF OHIO DEPARTMENT OF TRANSPORTATION — ADMINISTRATOR — DATE 07-18-2014 — 1/2

NOTES:

FLAGGERS

1. Flaggers, one for each direction, shall be used to control traffic continuously for as long as a one lane operation is in effect. The flaggers shall be able to communicate with each other at all times.

LENGTH OF CLOSURE

2. It is required that the length of closure be kept to a minimum at all times, as directed by the Engineer, with a maximum allowable length of 5000'.

When the ambient temperature exceeds 80 degrees Fahrenheit the Engineer may increase the maximum allowable length of closure to allow for sufficient cooling of new pavement.

The Engineer may shorten the maximum allowable length of closure to relieve excessive traffic backups or to improve traffic operation.

SIGN LOCATION AND SPACING

3A. The minimum spacing between work zone signs is shown in Table I. Maximum spacing should not be greater than 1.5 times the distances shown in Table I.

3B. Sign spacing should be adjusted to avoid conflict with existing signs. Minimum spacing to existing signs shall be 200' for speeds of 45 mph or less and a minimum of 400' for speeds of 50 mph or greater.

3C. The location of the advance warning signs should be adjusted to provide for adequate sight distance for the existing vertical and horizontal roadway alignment.

ADJUSTMENTS FOR SIGHT DISTANCE

4. The location of the flagger station and the advance warning signs should be adjusted to provide for adequate sight distance for the existing vertical and horizontal roadway alignment.

BASIC SIGNING

5A. ROAD WORK AHEAD (W20-1) signs shall be provided on entrance ramps or roadways entering the work limits.

5B. END ROAD WORK (G20-2) signs are only required for lane closures of more than 1 day. It is intended that these signs be placed on the mainline, on all exit ramps, and on roadways exiting the work limits.

5C. Overlapping of signing for adjacent projects should be avoided where the messages could be confusing. Any ROAD WORK AHEAD or END ROAD WORK sign which falls within the limits of another traffic control zone shall be omitted or covered during the period when both projects are active.

SIGNING DETAILS

6A. The Advisory Speed (W13-1P) plaque shall be used when specified in the plan.

6B. 36" warning signs may be used when the approach speed limit is 40 mph or less.

FLASHING WARNING LIGHTS

7. Type A flashing warning lights shown on the ROAD WORK AHEAD (W20-1) signs and on the LANE CLOSED AHEAD (W20-5) signs are required whenever a night lane closure is necessary.

CONES

8A. Cone spacing shall be as follows:

a) Spacing along the buffer shall be 40' center-to-center.
b) Spacing along the approach taper shall be 10' center-to-center.

8B. Cone sizes shall be as follows:

a) Cones used for daytime traffic control shall have a minimum height of 28".
b) Cones used for nighttime traffic control shall have a minimum height of 42".

8C. Provisions shall be made to stabilize the cones to prevent them from blowing over.

8D. A minimum of two cones shall be used to close the paved shoulder.

(RESERVED FOR FUTURE USE)

9A. (intentionally blank)

AREA ILLUMINATION

10A. Adequate area illumination of each flagger station shall be provided at night. Use of portable flood lighting is acceptable.

10B. To ensure the adequacy of floodlight placement and the elimination of glare, the Contractor and the Engineer shall drive through the worksite each night when the lighting is in place. Light placement and shielding shall be adjusted to the satisfaction of the Engineer.

INTERSECTION / DRIVEWAY ACCESS

11. Within the length of closure, provision shall be made to control traffic entering from intersecting streets and major drives as necessary to prevent wrong-way movements and to keep vehicles off of new pavement not ready for traffic. The Contractor shall:

a) Place across the closed lane, either three cones or barricades, and/or
b) Provide an additional flagger at every public street intersection and major driveway.

Cones placed across the closed lane shall be located 25' beyond the projected pavement edges of the driveway or cross highway. For barricades, see Standard Construction Drawing MT-101.60.

Existing STOP signs shall be relocated as necessary to assure proper location for the traffic conditions.

The method of control shall be subject to the approval of the Engineer.

CHIP SEAL OPERATION

12. For chip seal operations, additional signing shall be incorporated in the advance warning area.

a) The LOOSE GRAVEL (W8-7) and FRESH TAR (W21-2) signs shall both be used in advance of the chip seal operation.
b) Repeat The LOOSE GRAVEL sign with a 35 mph Advisory Speed (W13-1) plaque every half mile per CMS 422.09.
c) The LOOSE GRAVEL and FRESH TAR signs shall both be used for signing of side roads intersecting the work area.

THIS DRAWING REPLACES MT-97.11 DATED 07-19-2013.

SCD NUMBER MT-97.11 — FLAGGER CLOSING 1 LANE OF A 2-LANE HIGHWAY FOR PAVING OPERATIONS (NON-FED ONLY) — OFFICE OF ROADWAY ENGINEERING — STDS. ENGINEER Soisson — DATE 07-18-2014 — 2/2

STATE OF OHIO — DANIEL JOSEPH MARTIN — 70395 — REGISTERED — PROFESSIONAL ENGINEER

NO.	DATE	REVISION	BY	APVD

DSGN D MARTIN — DR E. HAMMONS — CHK D MARTIN — APVD D MARTIN

ch2m. — RA Consultants, LLC Engineers and Surveyors — Clermont County

VILLAGE OF NEWTONSVILLE
WASTEWATER TREATMENT PLANT &
COLLECTION SYSTEM - PART B
CLERMONT COUNTY WATER RESOURCES
DEPARTMENT, CLERMONT COUNTY, OHIO

CONVEYANCE

DETAILS

VERIFY SCALE

BAR IS ONE INCH ON ORIGINAL DRAWING. 0 — 1"

DATE	2017-03-31
PROJ	665163
DWG	CS-019
SHEET	90 of 91

BID READY

REUSE OF DOCUMENTS: THIS DOCUMENT, AND THE IDEAS AND DESIGNS INCORPORATED HEREIN, AS AN INSTRUMENT OF PROFESSIONAL SERVICE, IS THE PROPERTY OF CH2M HILL AND IS NOT TO BE USED, IN WHOLE OR IN PART, FOR ANY OTHER PROJECT WITHOUT THE WRITTEN AUTHORIZATION OF CH2M HILL.

©CH2M HILL 2015. ALL RIGHTS RESERVED.

SILT FENCE AND DIVERSIONS

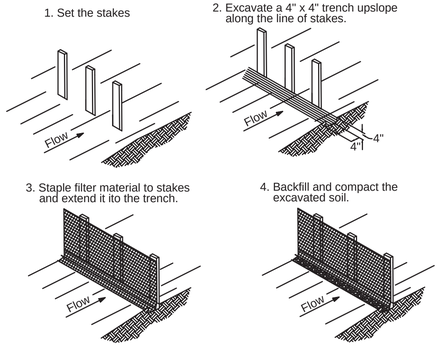

CONSTRUCTION OF A FILTER BARRIER (SILT FENCE)

NOT TO SCALE

SILT FENCE NOTES

1. Silt fence shall be constructed before upslope land disturbance begins.

2. All silt fence shall be placed as close to the contour as possible so that water will not concentrate at low points in the fence and so that small swales or depressions which may carry small concentrated flows to the silt fence are dissipated along its length.

3. To prevent water ponded by the silt fence from flowing around the ends, each end shall be constructed upslope so that the ends are at a higher elevation.

4. Where possible, silt fence shall be placed on the flattest area available.

5. Where possible, vegetation shall be preserved for 5 ft. (Or as much as possible) upslope from the silt fence. If vegetation is removed, it shall be reestablished within 7 days from the installation of the silt fence.

6. The height of the silt fence shall be a minimum of 16 in. Above the original ground surface.

7. The silt fence shall be placed in a trench cut a minimum of 6 in. Deep. The trench shall be cut with a trencher, cable laying machine, or other suitable device which will ensure an adequately uniform trench depth.

8. The silt fence shall be placed with the stakes on the downslope side of the geotextile and so that 8 in. of cloth are below the ground surface. Excess material shall lay on the bottom of the 6-in.-Deep trench. The trench shall be backfilled and compacted.

9. Seams between section of silt fence shall be overlapped with the end stakes of each section wrapped together before driving into the ground.

10. Maintenance - silt fence shall allow runoff to pass only as diffuse flow through the geotextile. If runoff overtops the silt fence, flows under or around the ends, or in any other way becomes a concentrated flow, one of the following shall be performed, as appropriate: 1) the layout of the silt fence shall be changed, 2) accumulated sediment shall be removed, or 3) other practices shall be installed.

Criteria for silt fence materials

1. Fence posts - the length shall be a minimum of 32 in. long. Wood posts will be 2-by-2-in. hardwood of sound quality. The maximum spacing between posts shall be 10 ft.

2. Silt fence fabric shall be odot type c geotextile fabric or as described by The chart below:

Fabric Properties	
Minimum Tensile Strength	120 lbs.
Maximum Elongation at 60 lbs	50%
Minimum Puncture Strength	50 lbs.
Minimum Tear Strength	40 lbs.
Minimum Burst Strength	200 psi
Apparent Opening Size	≤0.84mm
Minimum Permittivity	$1x10^{-2}sec^{-1}$
Ultraviolet Exposure Strength Retention	70%

INLET PROTECTION

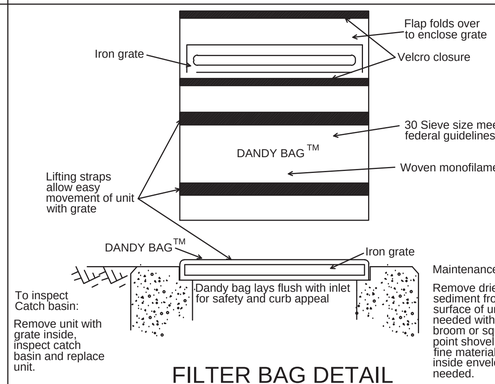

To inspect Catch basin:

Remove unit with grate inside, inspect catch basin and replace unit.

Maintenance:

Remove dried sediment from surface of unit as needed with stiff broom or square point shovel. Remove fine material from inside envelope as needed.

FILTER BAG DETAIL

MINIMUM AVERAGE FABRIC VALUES

Properties	Test Method	Test Values
Grab Tensile Strength 9lbs) (warp/fill)	ASTM D 4632	360/260
Grab Elongation (%) (warp/fill)	ASTM D 4632	27/15
Trapezoid Tear (lbs) (warp/fill)	ASTM D 4533	100/80
Puncture (lbs)	ASTM D 4833	130
Mullen Burst (psi)	ASTM D 3786	515
Ultra-Violet Resistance (% @ 500 hrs.)	ASTM D 4355	90%
Apparent Opening Size (U.S. sieve size)	ASTM D 4751	30
Permittivity (/sec)	ASTM D 4491	1.10
Permeability k (cm/sec)	ASTM D 4491	.05
Open Area (%)	COE 02215 86	11%
Mass per Unit Area (oz./SY)	ASTM D 5261	5.8
Water Flow Rate (gpm/sf)	ASTM D 4491	110

INSTALLATION:
Stand grate on end. Place Dandy Bag over grate. Roll grate over so that open end is up. Pull up slack. Tuck flap in. Press velcro strips together. Be sure end of grate is completely covered by flap or Dandy Bag will not work properly. Holding handles, carefully place Dandy Bag with grate inserted into catch basin frame.

MAINTENANCE
With a stiff bristle broom or square point shovel remove silt & other debris off surface after each event. Remove fine material from inside envelope as needed.

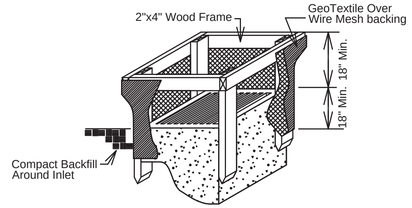

INLET PROTECTION IN SWALES, DITCH LINES OR YARD INLETS 2

1. Inlet protection shall be constructed either before upslope land disturbance begins or before the storm drain becomes operational.

2. The earth around the inlet shall be excavated completely to a depth at least 18 in.

3. The wooden frame shall be constructed of 2-by-4-in. construction-grade lumber. The 2-by-4-in. posts shall be driven 1 ft. into the ground at four corners of the inlet and the top portion of 2-by-4-in. frame assembled using the overlap joint shown. The top of the frame shall be at least 6 in. below adjacent roads if ponded water would pose a safety hazard to traffic.

4. Wire mesh shall be of sufficient strength to support fabric with water fully impounded against it. It shall be stretched tightly around the frame and fastened securely to the frame.

5. Geotextile shall have an equivalent opening size of 20-40 sieve and be resistant to sunlight. It shall be stretched tightly around the frame and fastened securely. it shall extend from the top of the frame to 18 in. below the inlet notch elevation. The geotextile shall overlap across one side of the inlet so the ends of the cloth are not fastened to the same post.

6. Backfill shall be placed around the inlet in compacted 6-in. Layers until the earth is even with notch elevation on ends and top elevation on sides.

7. A compacted earth dike or a check dam shall be constructed in the ditch line below the inlet if the inlet is not in a depression and if runoff bypassing the inlet will not flow to a settling pond. The top of earth dikes shall be at least 6 in. higher than the top of the frame.

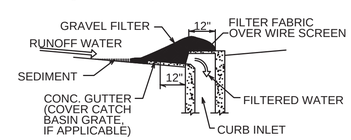

GRAVEL CURB INLET SEDIMENT FILTER

1. Filter fabric, meeting O.D.O.T. Spec. 712.09, Type "c", shall be placed over the curb inlet opening so that at least 12" of fabric, wire mesh and gravel extend across the inlet cover and at least 12" of fabric extends across the concrete gutter (past the grate, if applicable) from the inlet opening, as per detail.

2. Stone shall be piled against the fabric so as to anchor it against the gutter and inlet cover and to cover the fabric completely. O.D.O.T. No. 2 Coarse aggregate shall be used.

3. The wire mesh shall be of sufficient strength to support fabric and stone. It shall be a continuous piece with a minimum width of 30" And 4' longer than the throat length of the inlet, 2' on each side. The filter fabric and gravel shall entirely cover the wire mesh.

4. If the stone filter becomes clogged with sediment so that it no longer adequately performs its function, the stone must be pulled away from the block, cleaned and replaced.

SPECIFIC APPLICATION

This method of inlet protection is applicable at curb inlets where ponding in front of the structure is not likely to cause inconvenience or damage to adjacent structures and unprotected areas.

SEDIMENTATION, EROSION CONTROL, SEEDING, MULCHING & FERTILIZING NOTES

1. Sediment and erosion control facilities shall be installed and maintained in accordance with the latest edition of "rainwater and land development" handbook as prepared by the ohio department of natural resources division of soil and water conservation.

2. All disturbed areas shall be temporarily or permanently seeded and mulched or permanently sodded immediately upon completion of or significant suspension of grading or excavation operations. Vegetative stabilization must be accomplished within 7 days on portions of a site planned to be idle for more than 45 days.

3. When temporary erosion control measures become ineffective due to clogging or erosion they shall be maintained or repaired and replaced as directed by the developer, Ohio EPA or the city/county engineer.

4. All required runoff control facilities shall be in place prior to commencing any construction.

5. The developer is responsible for obtaining a npdes storm water general permit from the Ohio Environmental Protection Agency (OEPA) for this site including notice of intent (NOI) prior to construction and notice of termination (NOT) when construction is complete.

6. The developer or its appointed representative shall make inspections of the sedimentation and erosion control devices, materials and procedures used on this site and shall provide notes and documentation of these inspections upon request of (OEPA) or the city/county engineer. These inspections shall be made weekly or within 24 hours after a 7/2" or greater rain storm.

7. The developer or its appointed representative is responsible for the implementation, maintenance and repair of the sedimentation and erosion control devices, materials and procedures for this site.

NON-SEDIMENT POLLUTION CONTROL

1. Construction personnel, including subcontractors who may use or handle hazardous or toxic materials, shall be made aware of the following general guidelines:

Disposal and Handling
of
Hazardous and Other Construction Waste

DO:
- Prevent spills
- Use products up
- Follow label directions for disposal
- Remove lids from empty bottles and cans when disposing in trash
- Recycle wastes whenever possible

DON'T
- Don't pour into waterways, storm drains or onto the ground
- Don't pour down the sink, floor drain or septic tanks
- Don't bury chemicals or containers
- Don't burn chemicals or containers
- Don't mix chemicals together

2. Containers shall be provided for collection of all waste material including construction debris, trash, petroleum products and any hazardous materials to be used on-site. All waste material shall be disposed of at facilities approved for that material.

3. No waste materials shall be buried on-site. Site personnel, including sub- contractors shall be notified that no construction-related materials are to be buried on-site.

4. Mixing, pumping, transferring or otherwise handling construction chemicals such as fertilizer, lime, asphalt, concrete drying compounds, and all other potentially hazardous materials shall be performed in an area away from any watercourse, ditch or storm drain.

5. Equipment fueling and maintenance, oil changing, etc., Shall be performed away from watercourses, ditches or storm drains, in an area designated for that purpose. The designated area shall be equipped for recycling oil and catching spills.

6. Concrete wash water shall not be allowed to flow to streams, ditches, storm drains, or any other water conveyance. A sump or pit shall be constructed if needed to contain concrete wash water.

7. If hazardous substances such as oil, diesel fuel, hydraulic fluid, antifreeze, etc. are spilled, leaked, or released onto the soil, the soil should be dug up and disposed of with the trash at a licensed sanitary landfill (not a construction/demolition debris landfill). Spills on pavement shall be absorbed with sawdust or kitty litter and disposed of with the trash at a licensed sanitary landfill. Hazardous or industrial wastes such as most solvents, gasoline, oil-based paints, and cement curing compounds require special handling. Contact Ohio EPA (1-800-282-9378).

8. Spills of 25 gal. or more of petroleum products shall be reported to Ohio EPA (1-800-282-9378), the local fire department, and the local emergency planning committee within 30 min. of the discovery of the release.

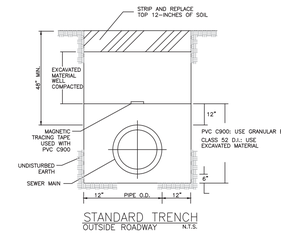

TRENCH AND PAVEMENT RESTORATION DETAIL TYPE 'A' AREAS OUTSIDE OF RIGHT-OF-WAY AND 3' OUTSIDE PAVED ROADWAY

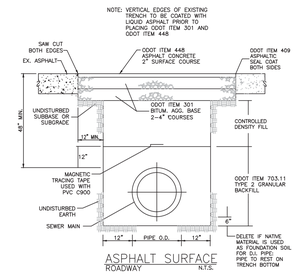

TRENCH AND PAVEMENT RESTORATION DETAIL TYPE 'B' ODOT ROADS SR 131 (WRIGHT ST.)

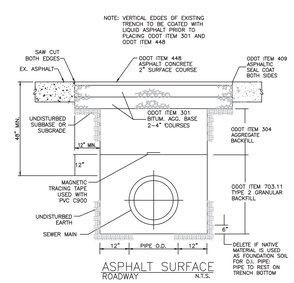

TRENCH AND PAVEMENT RESTORATION DETAIL TYPE 'D' VILLAGE ROADS CROSS ST, MAIN ST. AMITY ST. & LIBERTY ST.

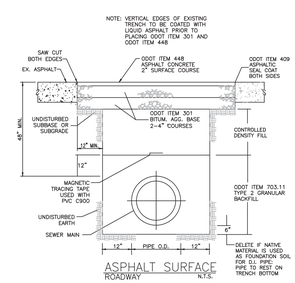

TRENCH AND PAVEMENT RESTORATION DETAIL TYPE 'C' COUNTY ROADS CEDARVILLE AND NEWTONSVILLE RD

STATE OF OHIO DANIEL JOSEPH MARTIN 70395 REGISTERED PROFESSIONAL ENGINEER

NO.	DATE	REVISION	BY	APVD

DSGN D. MARTIN | DR E. HAMMONS | CHK D. MARTIN | APVD D. MARTIN

Clermont County

VILLAGE OF NEWTONSVILLE
WASTEWATER TREATMENT PLANT & COLLECTION SYSTEM - PART B
CLERMONT COUNTY WATER RESOURCES DEPARTMENT, CLERMONT COUNTY, OHIO

ch2m:

RA Consultants, LLC Engineers and Surveyors

CONVEYANCE

DETAILS

NTS

VERIFY SCALE

BAR IS ONE INCH ON ORIGINAL DRAWING.
0 1"

DATE	2017-03-31
PROJ	665163
DWG	CS-020
SHEET	91 of 91

BID READY

REUSE OF DOCUMENTS: THIS DOCUMENT, AND THE IDEAS AND DESIGNS INCORPORATED HEREIN, AS AN INSTRUMENT OF PROFESSIONAL SERVICE, IS THE PROPERTY OF CH2M HILL AND IS NOT TO BE USED, IN WHOLE OR IN PART, FOR ANY OTHER PROJECT WITHOUT THE WRITTEN AUTHORIZATION OF CH2M HILL.
©CH2M HILL 2015. ALL RIGHTS RESERVED.